TM5-3810-305-10

TECHNICAL MANUAL

OPERATOR'S MANUAL

FOR

CRANE, WHEEL MOUNTED, HYDRAULIC, LIGHT, 7 1/2 TON (ROUGH TERRAIN CRANE)

MODEL LRT 110

CONSISTS OF:

Type I General Purpose (3810-01-165-0646)

Type II Airborne/Airmobile (3810-01-165-0647)

This technical manual is an authentication of the manufacturers commercial literature and does not conform with the format and content specified in AR 25–30, Military Publications, This technical manual does, however, contain available information that is essential to the operation and maintenance of the equipment.

Distribution Restriction: Approved for public release; distribution is unlimited.

HEADQUARTERS, DEPARTMENT OF THE ARMY

9 AUGUST 1991

WARNING

If NBC exposure is suspected, all air filter media should be handled by personnel wearing protective equipment. Consult your unit NBC Officer or NBC NCO for appropriate handling or disposal instructions.

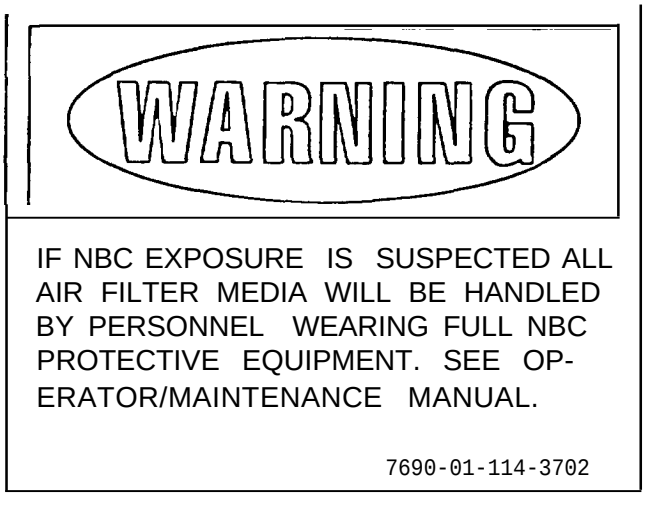

To order this NBC decal use:
National Stock Number (NSN) -7690-01-114-3702
Part Number (PN) – 12296626
Commercial and Government Entity Code (CAGEC) – 19207

TECHNICAL MANUAL

TM5-3810-305-10

HEADQUARTERS
DEPARTMENT OF THE ARMY
Washington D. C., 9 *August 1991*

OPERATOR'S MANUAL

FOR

CRANE, WHEEL MOUNTED, HYDRAULIC, LIGHT, 7 1/2 TON (ROUGH TERRAIN CRANE)

MODEL LRT 110

CONSISTS OF:

Type I General Purpose (3810-01-165-0646)

Type II Airborne/Airmobile (3810-01-165-0647)

REPORTING ERRORS AND RECOMMENDING IMPROVEMENTS

You can help improve this manual. If you find any mistakes or if you know of a way to improve the procedures, please let us know. Mail your letter, DA Form 2028 *(Recommended Changes to Publications and Blank Forms),* or DA Form 2028-2, located in the back of this manual, direct to: Commander, U.S. Army Tank-Automotive Command, ATTN: AMSTA-MB, Warren, MI 48397-5000. A reply will be furnished to you.

This technical manual is an authentication of the manufacturers commercial literature and does not conform with the format and content specified in AR 25430 Military Publications. This technical manual does, however, contain available information that is essential to the operation and maintenance of the equipment.

Distribution Restriction: Approved for public release; distribution is unlimited.

Title		Page
CHAPTER I INTRODUCTION		1-1
Section I	Purpose and Function	1-3
Section II	Capabilities	1-5
Section III	Performance Characteristics	1-5
Section IV	Equipment Specifications	1-11
Section V	Power and Utility Requirements	1-24
Section VI	Environmental Requirements	1-24
Section VII	List of Items Furnished	1-24
Section VIII	List of Items Required	1-24
Section IX	Storage Data	1-24
Section X	Tools and Test Equipment	1-25
Section XI	Warranty Information	1-27
Section XIl	Safety Precautions	1-27
CHAPTER 2 PREPARATION FOR USE		2-1
CHAPTER 3 GENERAL THEORY OF OPERATION		3-1
CHAPTER 4 OPERATION INSTRUCTIONS AND FUNCTIONS		4-1
Section I	Use of Operator's Controls and Indicators	4-3
Section II	Initial Adjustments and Control Settings	4-10
Section III	Start-up	4-17
Section IV	Operation Under Normal Conditions	4-18
Section V	Wire Rope Instructions	4-28
Section VI	Operation Under Emergency or Abnormal Conditions	4-56
Section VII	Shutdown	4-71
Section VIII	Transportability	4-72
CHAPTER 5 TYPE II SUPPLEMENT		5-1
Section I	Sectionalization	5-2
Section II	Transportability	5-46
APPENDIX A NEW EQUIPMENT PREPARATION		A-1
APPENDIX B LUBRICATION INSTRUCTIONS		B-1
Appendix C References		C-1
Appendix D Components Of End Item and Basic Issue Item List		D-1
Appendix E Additional Authorization List		E-1
Appendix F Operator/Crew PMCS		F-1
Index		I-1

CHAPTER 1
INTRODUCTION

The purpose of this chapter is to introduce the operator to the LRT 110 Crane functions, capabilities, performance. data and specifications. A special section on safe operation of the equipment is also included at the end of the chapter.

Section	Title	Page
I	Purpose and Function	1-3
	General	1-4
	Major Component Nomenclature	1-4
II	Capabilities	1-5
III	Performance Characteristics	1-5
	General	1-5
	Engine	1-5
	Electrical System	1-6
	Transmission	1-6
	Torque Converter	1-7
	Wheels	1-7
	Axles	1-7
	Brakes	1-7
	Suspension	1-7
	Steering	1-7
	Hydraulic System	1-8
	Swing System	1-8
	Drawbar	1-8
	Pintle Hook	1-8
	Outriggers	1-9
	Boom	1-9
	Winch	1-9
	Boom Cylinders	1-9
	Counterweight	1-10
	Decibel Level Chart	1-10
IV	Equipment Specifications	1-11
	Weights	1-11
	Dimensions	1-11
	Capacities	1-15
	Capacity Chart Notes	1-16
	Load Ratings on Outriggers	1-19

Section	Title	Page
	Load Ratings on Tires	1-20
	Maximum Permissible Hoist Line Load	1-21
	Radius From Centerline of Rotation	1-22
	Working Area Diagram	1-23
V	Power and Utility Requirements	1-24
VI	Environmental Requirements	1-24
VII	List of Items Furnished	1-24
	Hook Block	1-24
	Cable	1-24
	Boom Angle Indicator	1-24
	Boom Length Markers	1-24
VIII	List of Items Required	1-24
IX	Storage Data	1-24
X	Tools and Test Equipment	1-25
XI	Warranty Information	1-27
XII	Safety Precautions	1-27
	Introduction	1-27
	General Warnings	1-27
	General Cautions	1-36
	Safety Decals	1-41
	Minimum Safety Requirements For Work Platforms Suspended From Load Line or Rigidly Mounted On Boom	1-42

Section I
Purpose and Function

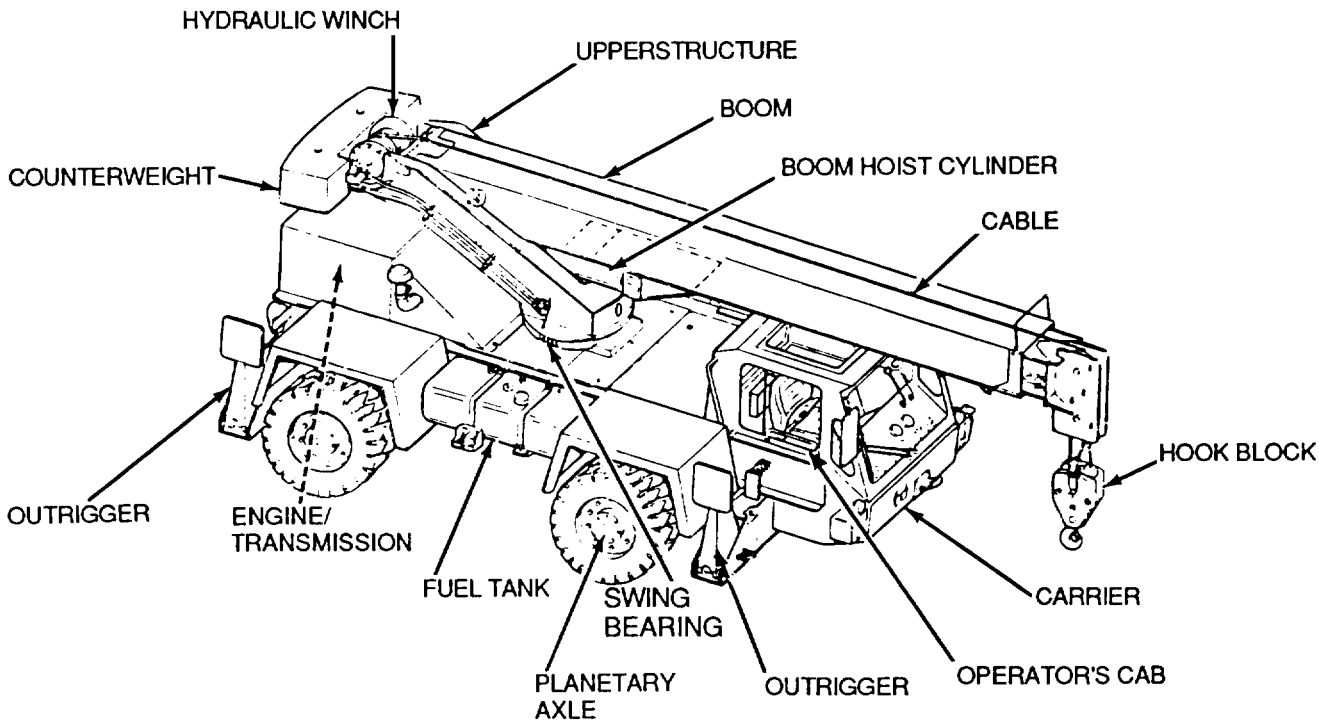

Figure 1-1. *Major Component Locations (Left Side)*

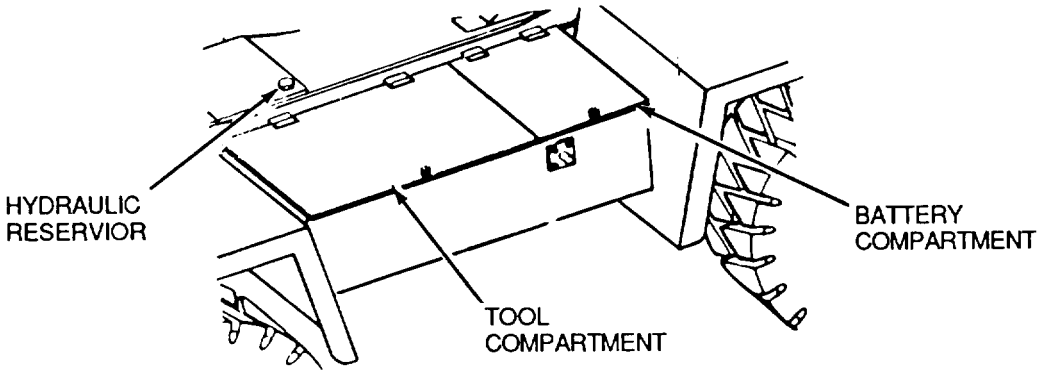

Figure 1-2. *Major Component Locations (Right Side)*

General

The purpose of this manual is to familiarize operators with the operation and maintenance of the LRT 110 Crane. This manual provides information and data for operation and lubrication. The operator of the LRT 110 Crane must not attempt to operate the vehicle before he has obtained a thorough understanding of the manual contents.

The LRT 110 Crane is a wheel-mounted, self-contained, two- and four-wheel drive, two- and four-wheel steering crane. A diesel engine powers the LRT 110 Crane, driving through a powershift transmission with tandem pump hydraulic power for operation of the crane, outriggers, fully revolving upperstructure and steering system.

The LRT 110 Crane design meets all the applicable requirements of OSHA, EPA, PCSA Std. #4, ANSI B30.5 and the specified SAE Standards.

Major Component Nomenclature

NOTE

All directional references in this manual (right or left, front or rear, etc.) correspond to the position of the operator when facing forward in operator's cab.

Upperstructure: The upperstructure includes the counterweight and hydraulic winch.

Boom Attachment: The boom attachment includes the crane boom, boom lift cylinder and hook block.

Carrier: The carrier includes the chassis, frame, engine, transmission, swing bearing, planetary axles, outriggers, operator's cab, fuel tank, hydraulic reservoir, batteries and tool compartment.

Section II
Capabilities

The LRT 110 Crane is capable of

- Lifting 15,000 pounds at a 10-foot radius or 4,000 pounds at a 30-foot radius, throughout a 360-degree rotation on outriggers.
- Lifting 13,600 pounds straight over the front on tires.
- A travel speed of up to 22 miles per hour on a level hard surface.
- A travel speed of up to 2.5 miles per hour carrying a 4,500 pound load at a 20-foot radius straight over the front.
- Rough terrain travel when switched into four-wheel drive.
- Continuous operation in temperatures of up to 120 degrees F or altitudes of up to 5,000 feet.
- Fording up to 30 inches of water.
- Operating in ammunition and petroleum dumps.

Section III
Performance Characteristics

General

The following are performance specifications for the LRT 110 Crane.

Engine

Type	Cummins 4B3.9 Four cylinder
Bore and Stroke	4.02 x 4.72 in. (102 x 120mm)
Displacement	239.3 in. (3.92 L)
Maximum Gross Horsepower	80 hp (60 kw) at 2,800 rpm

Maximum Gross Torque	184 lb-ft (249 N· m) at 2,800 rpm
Net Power	60 hp (44.7 kw) at 2,800 rpm
Air Filter	Dry type

Electrical System

Alternator	24 V, 40 amp
Battery	440 cold cranking amp at 24 V

Transmission

Type	Funk, Powershift
	Four speeds forward/reverse
Shift Controls	Forward/reverse lever
	Gear speed (1 thru 4) select lever
	Two/four-wheel drive select lever

Gear Ranges				
Forward/ Two- or Four- Wheel Drive	Gear	Maximum Speed	Maximum Tractive Effort	Gradeability At Stall
	1	3.3 mph (5.3 km/h)	18,830 lb (8,54 1 kg)	99.2%
	2	6.2 mph (9.9 km/h)	9,930 lb (4,504 kg)	38.8%
	3	11.4 mph (18.3 km/h)	5,400 lb (2,449 kg)	19.1%
	4	22.0 mph (35.4 km/h)	2,900 lb (1,315 kg)	9.2%

Torque Converter

Type	Single stage, three element Free wheel stater (Size 11.75 in, STR-2.9)

Wheels

Type	Disc 8.25 x 22.5 in. (210 x 572 mm) 108 in. wheelbase (2,743 mm)
Tires	12.0 x 22.5, 14 PR Directional Tread 90 psi (621 kPa) pressure

Axles

Type	Soma, planetary, Model 3 Ratio: total reduction of 19.61:1

Brakes

Type	Hydraulically boosted hydraulic, dual system with front-to-rear split

Suspension

Type	Oscillating rear axle Automatic hydraulic lockout
Driving Mode	Two-wheel, front drive for hard surfaces at high speeds Four-wheel drive for off-road, rough terrian

Steering

Type	Full fluid linked power steering Auxiliary steering pump driven by wheel rotation provides steering and braking during power loss
Modes	Two-wheel steering; four-wheel steering; crab steering
Turning Radius	Two-wheel: 32 ft, 2 in. (9.80 m) Four-wheel: 18 ft, 4 in. (5.59 m)

Hydraulic System

Hydraulic Pump Drive	One tandem hydraulic pump, driven off transmission at 0.87 times engine rpm
Steering, Brake and Swing Circuit	Pump: 21 gal (79.5 L) per rein/operating at 2,440 rpm and 2,650 psi (18,272 kPa) Priority flow: 10 gal (37.8 L) per min 2,500 psi (17,238 kPa)
Winch Circuit	18 gal (68.1 L) per rein/operating at 2,440 rpm and 2,650 psi (18,272 kPa)
Boom Hoist, Telescope and Outrigger Circuit	21 gal (79.5 L) per rein/operating at 2,440 rpm and 2,750 psi (18,961 kPa)
Hydraulic Valve Bank: Hoist Telescope, Swing, Outrigger	Four-spool, two-way valve
Winch Valve	Single-spool, two-way valve
Oil Filtration	Full flow system with 100-mesh (140-micron) screen and 10-micron return line filter

Swing System

Type	Worm gear reduction unit powered by hydraulic motor
Speed	No load: 3.08 rpm

Drawbar

Continous Pull	10,000 lb (4,536 kg)

Pintle Hook

Towing Capacity	40,000 lb (18,144 kg)

Outriggers

Type	Flipper 7 in. (178 mm) lift on 12.00 x 22.5, 14 PR standard tires

Extend Time per Outrigger	4.50 sec
Retract Time per Outrigger	4.00 sec

Boom

Type	Standard, two section 35.75 ft (10.90 m)
Construction	All welded, box beam
Point Sheaves	Cast, ductile iron, mounted on non-friction bearings. Two sheave boom head
Retraction	To 21.75 ft (6.63 m) (PCSA Standards)
Base and Tip Sections	70,000 psi (483 N/mm2) material

Winch

Maximum Line Speed (NO LOAD)	First layer: 177 ft (53.95 m) per min
	Third layer: 216 ft (65.84 m) per min
Drum Capacity	350 ft (107 m) Five layers
Rope Size	1/2 in. 6 x 9 Independent Wire Rope Core (IWRC), Improved Plow Steel (IPS), Preformed

Boom Cylinders

NOTE

All cylinders contain pilot check valves.

Boom Hoist Time	28.5 sec
Boom Down Time	25.3 sec
Telescope Extend Time	27.2 sec
Telescope Retract Time	22.7 sec

Counterweight

Weight	2,200 lb (998 kg)

Decibel Level Chart

WARNING

Within the 85-dB envelope, hearing protection is required. Failure to follow this procedure could cause SERIOUS INJURY.

NOTE

Radius dimensions illustrated in Decibel Level Chart are from center of rotation. Points on the profile are from nearest surface of the crane.

Exposing the unprotected human ear to sound levels above 85 dB (measured on the "A" scale) for prolonged periods can result in permanent hearing loss.

In order to avoid hearing loss, ear plugs or other suitable protective devices should be worn when working within the 85 dBA envelope (40 ft maximum from the nearest surface of the crane) as shown on Figure 1-3.

Sound levels in the operators cab can reach 87 dBA with the cab closed and therefore operators should wear hearing protection while operating the LRT 110 Crane.

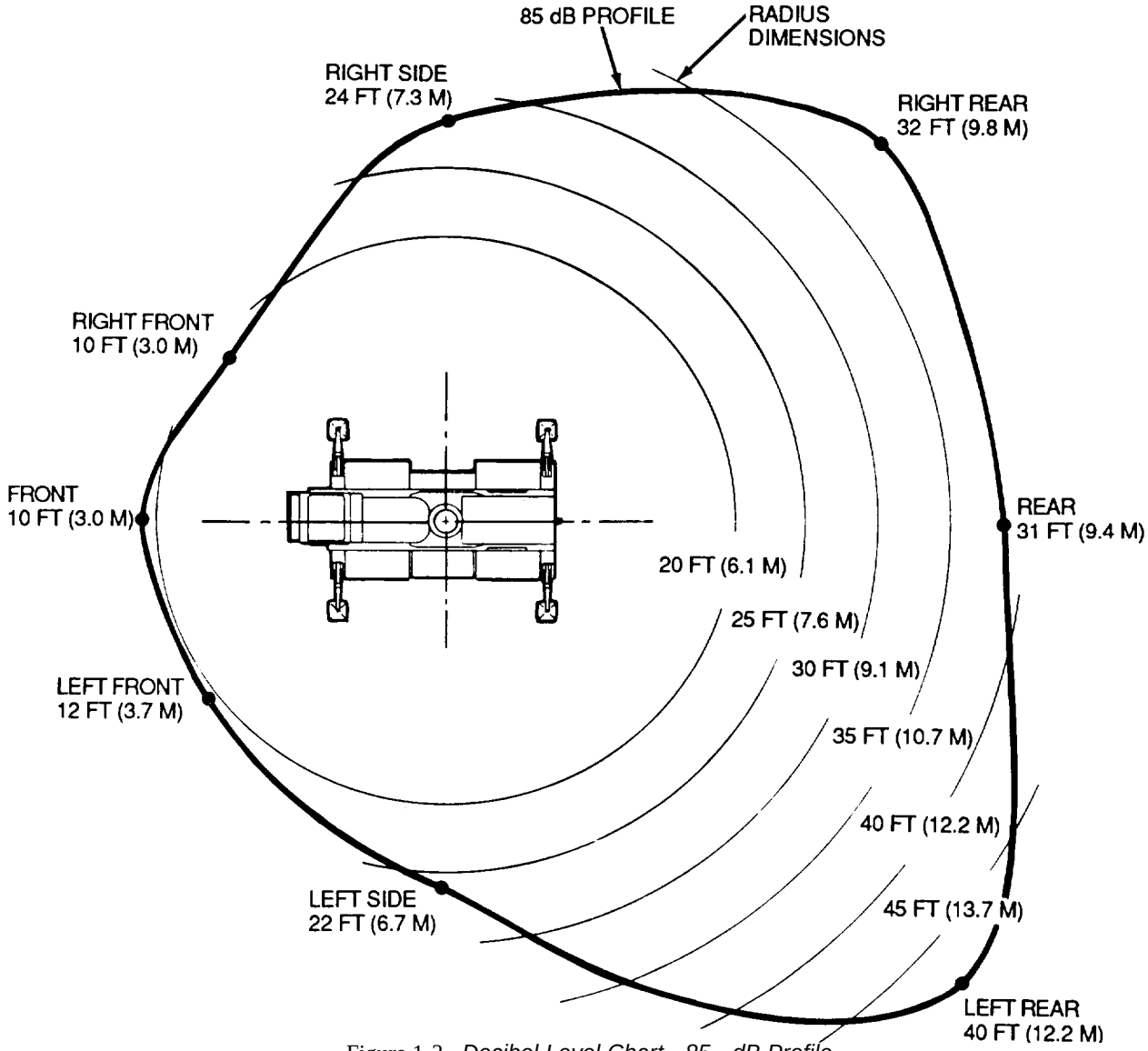

Figure 1-3. *Decibel Level Chart - 85 - dB Profile*

Section IV
Equipment Specifications

Weights		**Type II (Differences)**
Vehicle Weight Distribution:		
Front	10,760 lb (4,881 kg)	ll,710 lb (5,312 kg)
Rear	12,110 1b (5,493 kg)	12,520 lb (5,679 kg)
Total	22,870 lb (10,374 kg)	24,230 lb (10,991 kg)
Hook Block (One sheave)	235 lb (107 kg)	

Dimensions	
Winch:	
Drum Diameter	8.5 in. (216 mm)
Drum Length	12.25 in. (311 mm)
Flange Diameter	14.56 in. (370 mm)
Cylinders:	
Boom Extend	Bore: 4.0 in. (102 mm)
	Stroke: 168 in. (4.27 m)
	Rod: 3 in. (76 mm)
Boom Hoist	Bore: 8.5 in. (216 mm)
	Stroke: 39.3 in. (998 mm)
	Rod: 3 in. (76 mm)

Outrigger:	Bore: 5.0 in. (127 mm) Stroke: 17.75 in. (45 1 mm) Rod: 3.0 in. (76 mm)

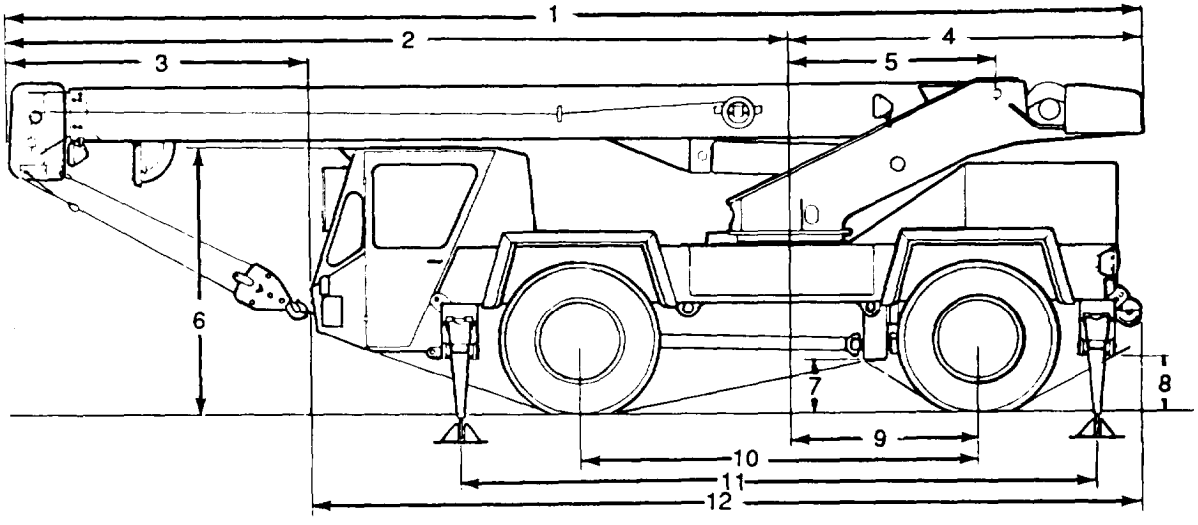

Figure 1-4. *General Dimensions*

NOTE

All dimensions assume boom fully retracted and crane equipped with standard tires

1.	Overall Length	25 ft, 8.16 in. (7.83 m)
2.	Centerline of Rotation to Boom End	17 ft, 8 in. (5.39 m)
3.	Boom End to Front of Carrier	6 ft, 6.5 in. (1.99 m)
4.	Tailswing Radius	7 ft, 9 in. (2,36 m)
5.	Centerline of Rotation to Boom Pivot	4 ft, 8.5 in. (1.44 m)
6.	Height of Cab	6 ft, 2 in. (1.88 m)
7.	Ground Clearance to Transmission	14.4 in. (366 mm)
8.	Ground Clearance to Outrigger Box	15 in. (38 1 mm)
9.	Centerline of Rotation to Centerline of Rear Axle	4 ft, 2.9 in. (1.29 m)
10.	Wheelbase	9 ft (2.74 m)
11.	Centerline of Front Outrigger Box to Centerline of Rear Outrigger Box	14 ft, 4 in. (4.37 m)
12.	Overall Length of Carrier	19 ft, 1.6 in. (5.83 m)

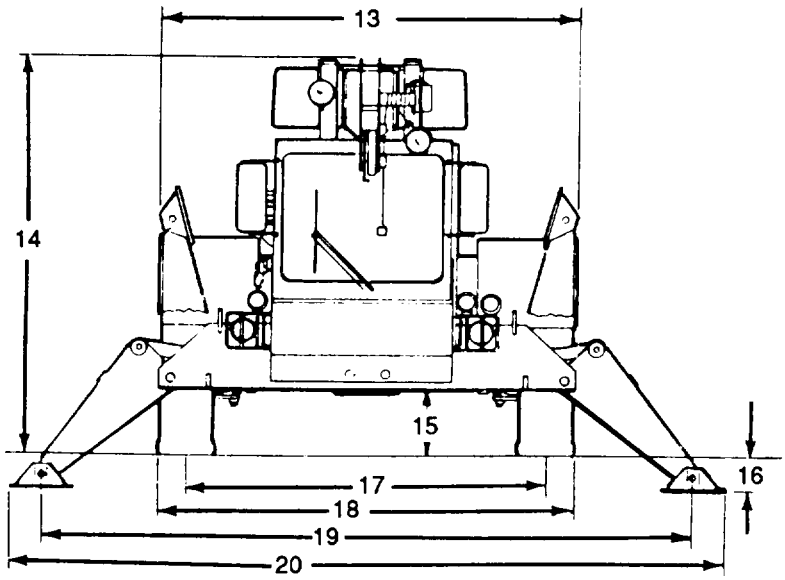

Figure 1-5. General Dimensions

13.	Overall Travel Width	8 ft (2.44 m)
14.	Overall Height	7 ft, 8.5 in. (2.35 m)
15.	Ground Clearance to Lowest Point of Axle	14 in. (356 mm)
16.	Outrigger Extension Below Grade	7.3 in. (185 mm)
17	Track	6 ft, 10.3 in. (2.09 m)
18.	Width of Carrier	8 ft (2.44 m)
19.	Effective Width of Outriggers	12 ft, 4.9 in. (3.78 m)
20	Overall Width Over Floats	13 ft, 7.9 in. (4.16 m)

Capacities

Cooling System	28 qt (26.5 L)
Fuel	44 gal (166.5 L)
Crankcase	11 qt (10.4 L)
Hydraulic System	45 gal (170.3 L)
Hydraulic Oil Reservoir	23.8 gal (90. 1 L)
Transmission:	
Capacity	20.5 qt (19.4 L)
Refill	12 qt (11.4L)
Axle:	
Hub (es)	3 qt (2.8 L)
Differential	14 qt (13.2 L)
Swing Reduction Unit	3 qt (2.8 L)
Winch	2 qt (1.9L)

Capacity Chart Notes

WARNING

- Never lift or swing load directly over operator's compartment or over ground personnel in the work area, Failure to follow this procedure could cause DEATH or serious injury.
- All notes on the Capacity Chart must be treated as WARNING'S. Failure to follow these procedures could cause DEATH or serious injury.

NOTE

The following is a direct copy of the notes on the Capacity Chart found on the machine. For clarification of the notes, refer to page 1-18.

GENERAL

1. Crane load ratings as determined by boom length, radius and boom angle apply to this crane only as originally manufactured and equipped. THEY ARE MAXIMUM LOAD RATINGS.

2. The crane and its load ratings are in accordance with Power Crane and Shovel Association Standard No. 4, SAE Crane Load Stability Test Code J-765a, SAE Method of Test for Crane Structure J-1063, and Safety Code for Cranes, Derricks and Hoists, ANSI B30.5-1982.

3. Improperly operated or maintained equipment can be dangerous. The operator and other personnel should read and fully understand the Operator's Manual furnished by the manufacturer before operating or maintaining this machine. Rules for safe operation of equipment should be adhered to at all times. If either manuals or lift chart are missing, they should be ordered by machine serial number through the distributor.

4. Operators and supervisors must fully understand Safety Standards for Mobile Hydraulic Cranes ANSI B30.5 or latest, and be familiar with Federal, State and local safety regulations. Consult section of Operator's and Service Manual for more exacting description of the use of this lift chart.

SET-UP

5. Crane load ratings are based on the machine being leveled and standing on a firm, uniform supporting surface.

6. Crane load ratings on outriggers are based on all outrigger beams fully extended and the tires raised free of the supporting surface.

7. Crane load ratings on tires depend on appropriate inflation pressure and tire conditions. Caution must be exercised when increasing air pressure in tires. Consult Operator's Manual for precautions.

8. Consult appropriate section of Operator's and Service Manual for more exact description of hoist line reeving.

9. The use of more parts of line than required by load may result in having insufficient rope to allow the hook block to reach the ground.

10. Properly maintained wire rope is essential to safe crane operation. Consult Operator's Manual for proper maintenance and inspection requirements.

11. When spin resistant wire is used, the allowable rope loading shall be the breaking strength divided by five (5) unless otherwise specified by wire rope manufacturer.

OPERATION

12. Crane load ratings must not be exceeded. DO NOT ATTEMPT TO TIP THE MACHINE TO DETERMINE ALLOWABLE LOADS.

13. Crane load ratings are for lift crane service. Applications for other than lift crane (clamshell and magnet) are permitted. Due to significant variations in materials and applications, consult factory for optimum capability.

14. Weight of hooks, hook blocks, slings and all other load handling devices must be considered part of the load to be handled and must be subtracted from the load ratings to obtain the allowable load to be lifted.

15. Crane load ratings are based on freely suspended loads. SIDE LOAD ON BOOM OR JIB IS EXTREMELY DANGEROUS.

16. Practical working loads depend on the supporting surface, wind velocity, pendulum action, jerking or sudden stopping of loads, hazardous surroundings, experience of personnel, proper operation, tire inflation, tire condition, traveling with loads, multiple machine lifts, proximity of electrical wires, etc. Appropriate reduction of load ratings must be made for these and any other conditions which may affect practical working loads.

17. Crane load ratings with an asterisk (*) beside them are based on the machine's structural strength. All other ratings are based on stability and do not exceed the specified percentage of tipping load as determined by SAE Crane Stability Test Code J765a.

18. For all boom lengths between the retracted and extended boom length, the rated loads are determined by boom angle only shown in the extended boom column. For boom angles not shown, use capacity of the next lower boom angle.

19. When either radius or boom length, or both, are between listed values, the smaller of the two load ratings shall be used.

20. Load ratings are dependent upon the crane being maintained according to manufacturer's specifications.

21. The maximum load which may be telescoped is limited by boom angle, hydraulic pressure, boom lubrication, etc. It is safe to attempt to extend and retract within the limits of the capacity chart.

22. It is recommended that load handling devices, including hooks and hook blocks, be kept away from boom head at all times.

23. The boom angles shown on the capacity chart give an approximation of the operating radius for a specified boom length. The boom angle, before loading, should be greater to account for boom deflection.

24. DO NOT LIFT LOAD OVER OPERATOR.

DEFINITIONS

25. Operating Radius: The horizontal distance from the axis of rotation before loading to the center of the vertical hoist line or tackle with load applied.

26. Freely Suspended Load: Load hanging free with no direct external force applied except by the hoist rope.

27. Side load: Horizontal force applied to the lifted load either on the ground or in the air.

28. Working Arc: Areas measured in a circular arc around the centerline of rotation as shown on the working area diagram.

CLARIFICATIONS

WARNING

All notes on the Capacity Chart must be treated as WARNINGS. Failure to follow these procedures could cause DEATH or serious injury.

NOTES 4 & 8

The Service manual and Operator's manual are the same, Operation manual. Operator's manual, refer to section XII.

NOTE 7

Consult this manual, page 1-20, Load Ratings on Tires; tire pressure must be maintained at 90 psi.

NOTES 5, 8 & 10

Consult Hoist Line Reeving (refer to page 2-2) and Wire Rope Instructions (refer to page 4-28).

NOTE 13

The use of clamshells, magnets or work platforms, which are not provided with the machine, is not permitted.

LOAD RATINGS ON OUTRIGGERS

ON OUTRIGGERS							
	BOOM LENGTH 21.75 Ft. Retracted			BOOM LENGTH 35.75 Ft. Extended			
RADIUS	∠°	FRONT	360°	∠°	FRONT	360°	RADIUS
10	51°	15,000*	15,000*	70°	15,000*	15,000*	10
12	43°	15,000*	15 ,000*	66°	15000*	15,000*	12
13	40°	15,000*	15,000*	64°	15,000*	15,000*	13
14	35°	15,000*	14,100*	62°	15,000*	14,100*	14
15	29°	14,100*	13,000	61°	14,100*	13,200	15
20				51°	10,300*	7,900	20
25				38°	7,700*	5,400	25
28				27°	6,300	4,500	28
30				17°	5,700	4,000	30

Load Ratings On Tires

NOTES:

1, For Pick and Carry Operation, boom must be centered over the front of the machine.

2. The load should be restrained from swinging.

3. Creep Speed is crane movement of less than 200 ft (61 m) in a 30-minute period and not exceeding 1.0 mph (1.6 km/h).

RECOMMENDED TIRE PRESSURE		
12:00 x 22.5 14PR	STATIONARY	TRAVEL
	90 PSI	90 PSI

The above tire pressures are for both off-road and highway use.

ON TIRES							
			12:00 X 22.5- 14PR				
	MAX.	MIN.	STATIONARY		PICK & CARRY		
					CREEP	2.5 MPH	
RADIUS	∆°	∆°	360°	ST. OVER FRONT			RADIUS
10	71°	51°	7,700*	1 3,600*	10,500*	8,700*	10
12	67°	43°	5,900	11,000	8,900*	7,400*	12
15	63°	29°	4,100	7,500	7,300*	6,000*	15
20	57°	0°	2,600	4,700	4,700	4,500*	20
25	40°	0°	1,900	3,400	3,400	3,400	25
28	29°	0°	1,600	2,800	2,800	2,800	28
30	17°	0°	1,400	2,600	2,600	2,600	30

MAXIMUM PERMISSIBLE HOIST LINE LOAD

Line Parts	1	2	3
Maximum Load	6,000 lb (2,722 kg)	12,000 lb (5,443 kg)	15,000 lb (6,804 kg)
Boom Head	1	1 -D	1-2
Hook Block	D	1	1-D

1, 2, D = Cable to sheave position and dead end. Sheaves are numbered left to right.
Wire Rope = 6 x 19 Class, 23,000 lb (10,433 kg) minimum breaking strength; l/2-inch diameter.
I. P.S., I. W.R.C., Preformed

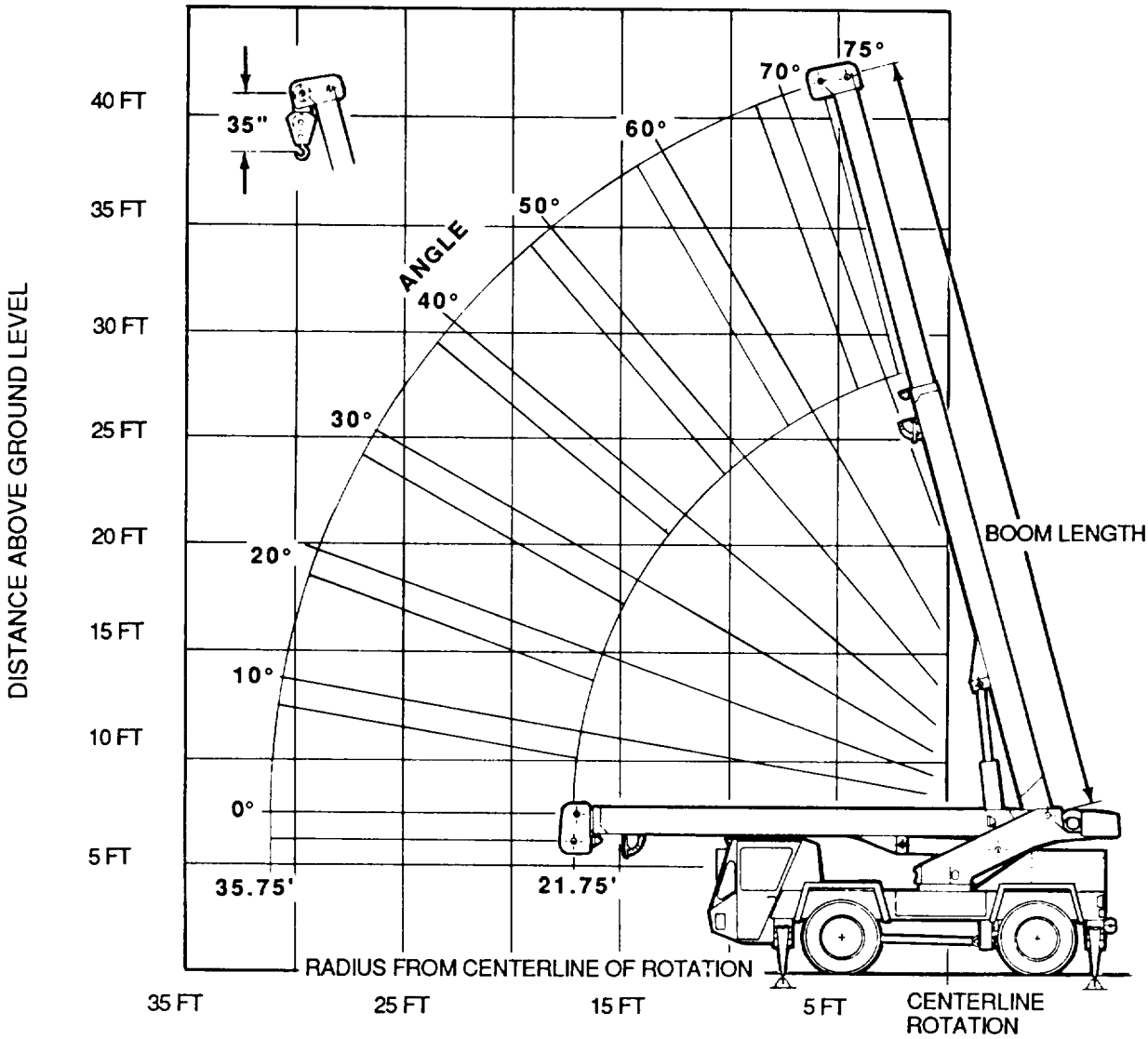

Figure 1-6. *Radius from Centerline of Rotation*

WARNING

Never lift or swing load directly above operator's compartment or over ground personnel in the work area. Failure to follow this procedure could cause DEATH or serious injury.

NOTE

Working areas are areas measured in a circular arc around centerline or rotation.

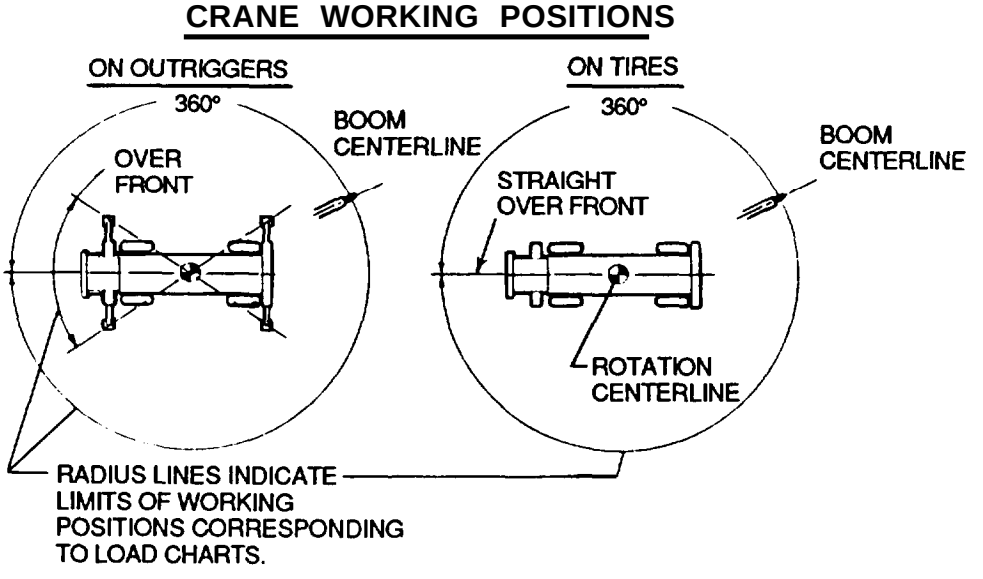

Figure 1-7. *Working Area Diagram*

Section V
Power and Utility Requirements

*** *NOT APPLICABLE****

Section VI
Environmental Requirements

****NOT APPLICABLE****

Section VII
List of Items Furnished

Hook Block: A 10-ton single-sheave hook block is provided with swivel hook and safety latch. Sheaves comply with SAE J-881. The weight of the hook block provides adequate overhaul of the cable, insuring smooth cable operation of the hy - draulic winch.

Cable: A l/2-inch diameter, 6 x 19 class cable of right regular lay, having an independent wire rope core and constructed of improved plow steel, is provided, having a 3.5:1 safety factor in accordance with SAE J-959. The winch drum capacity is such that when the crane is properly reeved, three wraps of cable are maintained at all times on the hoist drum.

Boom Angle Indicator: A mechanical boom angle indicator conforming to SAE J375 is provided for angular boom elevations.

Boom Lenght Markers: Boom length markers are located on both sides of the inner boom to indicate retraced length of 21.75 ft (6.63 m) or a fully extended boom length of 35.75 ft (10.90 m) and are used in conjunction with Capacity Chart.

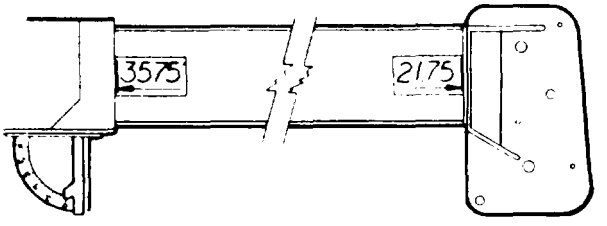

Figure 1-8. *Boom Lenght Marker*

Section VIII
List of Items Required

****NOT APPLICABLE****

Section IX
Storage Data

LRT 110 Cranes being placed in storage must be adequately protected from deterioration during extended periods of idleness. Proper protection insures that the crane can be restored to service with minimum effort.

What specific preparation procedures are required depends upon the length of time the crane is to be stored. Short Term Storage is defined as 30 days or less. Extended Storage is defined as more than 30 days.

NOTE

For a complete list of storage instructions for the LRT 110 Crane, refer to Koehring Commercial Maintenance Instructions.

Section X
Tools and Test Equipment

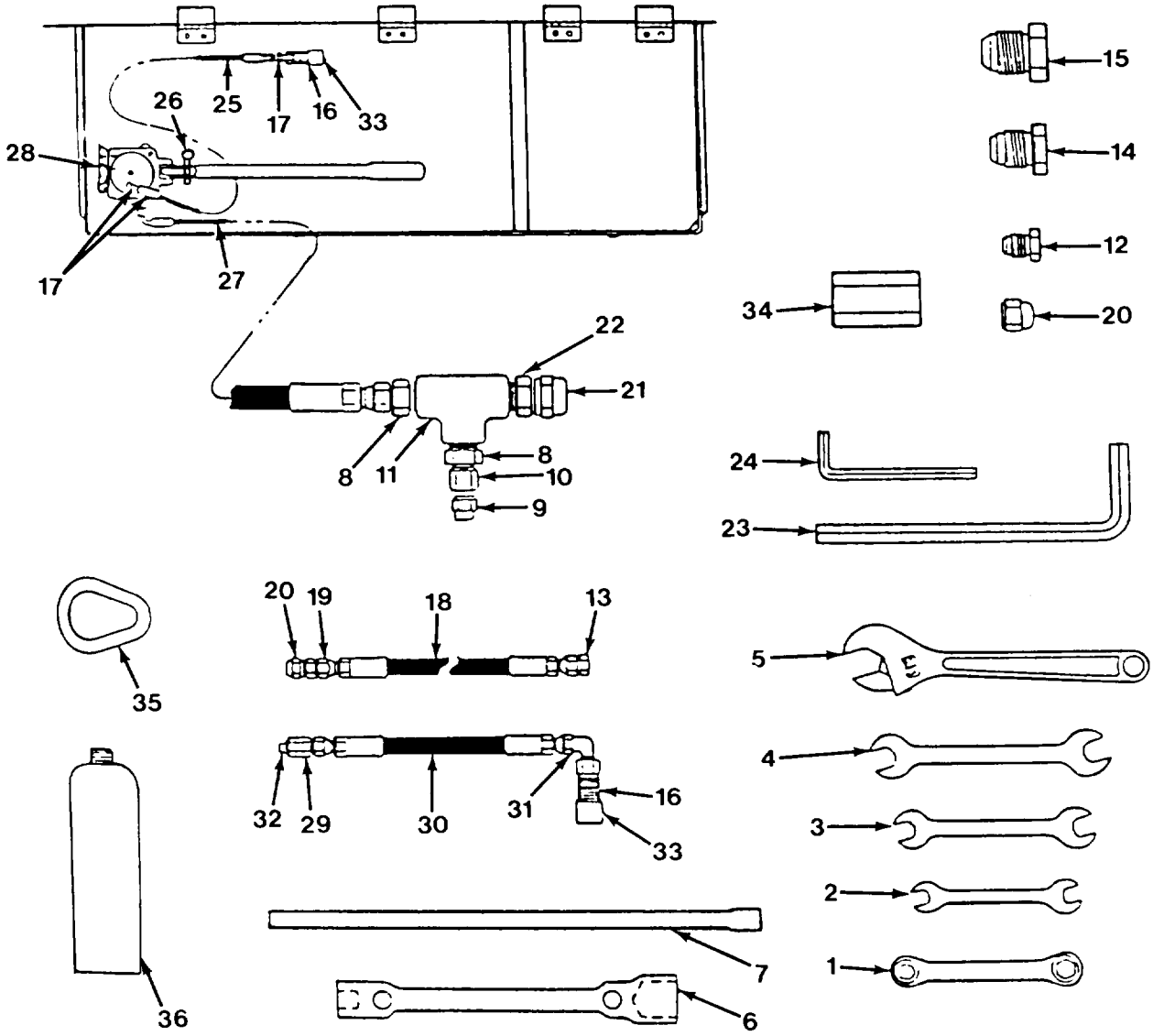

Figure 1-9. *Tools and Test Equipment*

The LRT 110 Crane Tool Kit Consists of

Tool	Use	Qty
1 Wrench, 3/4 x 7/8	Emergency swing	1
2 Wrench, 9/16 x 5/8	Hose connections	1
3 Wrench, 5/8 x 11/16	Hose connections	1
4 Wrench, 3/4 x 7/8	Hose connections	1
5 Wrench, 12 inch, Adjustable	All purpose	1
6 Wrench, Lug	Wheel nuts	1
7 Handle	Lug wrench	1
8 Adapter, -8 to -6	Hose adapter	2
9 Cap, -4	Emergency hose	1
10 Reducer, -6 to -4	Winch brake hose	1
11 Tee, -8	Emergency hose adapter	1
12 Plug, -4	Open hose ends	1
13 Plug, -6	Open hose ends	1
14 Plug, -lo	Open hose ends	1
15 Plug, -12	Open hose ends	3
16 Disconnect, (Quick), Female	Reservoir tank	2
17 Adapter, -6 to -4	Hose adapter	3
18 Hose	Outrigger emergency return	1
19 Adapter, -6 to -6	Hose adapter	1
20 Cap, -6	Hose cap	2
21 Cap, -12	Hose cap	1
22 Adapter, -12 to -8	Hose adapter	1
23 Wrench, He. , 5/16	Boom hold valve	1
24 Wrench, He: . 5/32	Extend cylinder hold valve	1
25 Hose	Hand pump supply hose	1
26 Pin	Engages handle on hand pump	1
27 Hose	Pressure supply from hand pump	1
28 Pump, Hand	Emergency crane operation	1
29 Adapter	Hose adapter	1
30 Hose	Test guage connector	1
31 Elbow	Hose fitting	1
32 Plug, Pipe, -4	Hose plug	1
33 Plug, Cap	Hose cap	2
34 Adapter, Hex, (Axle Plug)	Axle check plug removal	1
35 Link	Hook block to pintle air transport	1
36 Cylinder, Ether	Cold start assist (in container)	1

Section XI
Warranty Information

Refer to Warranty Technical Bulletin, TB 5-3810-305-15.

Section XII
Safety Precautions

Introduction

The LRT 110 Crane is designed to conform to all applicable SAE, ANSI and OSHA safety requirements.

As a crane operator, your responsibility for safety is not lessened by the operational aids and warning devices provided.

Guard against a false sense of security. Failure to follow even a single safety precaution can cause DEATH or SERIOUS INJURY. You are responsible for your own safety as well as others working around you.

Warning decals are placed conspicuously on the vehicle warning of hazards including the danger of electrocution if the boom or load is swung into power lines.

In addition to the following list, WARNINGS, CAUTIONS and NOTES appear throughout the manual directly above the procedure to which they apply.

WARNING indicates a hazard which can result in DEATH or serious injury.

CAUTION is a reminder of safety practices or directs attention to usage practices that may result in damage to equipment.

NOTE is a statement containing information that will make the procedure easier to perform.

WARNING

Exercise good judgment when operating the LRT 110 Crane. Read and understand all safety precautions before operating the crane. Failure to follow these precautions could cause DEATH or serious injury.

General Warnings

WARNING

Do not attempt to operate the LRT 110 Crane until all operating instructions have been read and understood. Knowledge of controls alone is inadequate preparation to operate this vehicle. Failure to follow this procedure could cause DEATH or serious injury.

WARNING

To avoid many dangerous practices, play it safe by following correct procedures. Failure to follow these procedures could cause loads to fall causing DEATH or serious injury.

WARNING

Be aware of limited work area while working on the deck area of the LRT 110 Crane. The deck and fender surface is small and can become slippery in inclement weather. Failure to follow this procedure could cause DEATH or serious injury.

WARNING

Never disconnect hydraulic lines or fittings before venting pressure. Turn dipstick cap 1/4 turn to safety notch to relieve pressure. Failure to follow this procedure could cause SERIOUS INJURY.

WARNING

Alert all personnel that the upperstructure is to be lifted off the carrier. Keep all uninvolved personnel clear of the vehicle while hoisting and removal are taking place. Check all pin connections, cable alignment and machine bubble level before proceeding with the lift. Failure to follow this procedure could cause DEATH or serious injury.

WARNING

Keep hands and arms clear of all pinch points while checking the alignment of the upperstructure and the earner mounting surface. Failure to follow this procedure could cause SERIOUS INJURY.

WARNING

Keep arms and hands from under upperstructure. Failure to follow this procedure could cause SERIOUS INJURY.

WARNING

Vehicle must be level to prevent possible loss of control of upperstructure when lifting off of ground. DEATH or serious injury may result if upperstructure gets out of control.

WARNING

Check that all pins and pin locks are installed and secured properly. DEATH or serious injury may result if upperstructure comes loose.

WARNING

Stay clear of hoisted upperstructure while it is being positioned over carrier. Failure to follow this procedure could cause DEATH or serious injury.

WARNING

Turn the face during the following procedure to avoid having hydraulic oil splash in face or eyes. Failure to follow this procedure could cause SERIOUS INJURY.

WARNING

Weight of (component) is approximately XX lb (XX kg). Use two people to properly support and lift (component). Failure to follow this procedure could cause DEATH or serious injury.

WARNING

Unwarranted use of BY-PASS switch can result in damage to the LRT 110 Crane and cause DEATH or serious injury.

WARNING

Cooling system is pressurized. Use extreme caution and proper protection when removing radiator cap after operating temperature is reached. When removing cap, loosen it slowly to the left, then pause a moment. Steam and hot gases will be escaping through the radiator cap; avoid being burned by these gases. Continue to turn cap until it can be removed. Failure to follow this procedure could cause SERIOUS INJURY.

WARNING

- Battery gases can explode. Do not smoke or allow sparks or open flames near batteries. Wear safety glasses or goggles when checking the batteries. Failure to follow this procedure could cause DEATH or serious injury.

- Sulfuric acid contained in batteries can cause serious bums. If battery corrosion or electrolyte makes contact, take immediate action to stop the burning effects:

EYES: Flush with cold water for no less than 15 minutes and seek medical attention immediately.

SKIN: Flush with large amounts of cold water until all acid is removed. Seek medical attention as required.

INTERNAL: If corrosion or electrolyte is ingested, drink large amounts of water or milk. Follow with milk of magnesia, beaten egg or vegetable oil. Seek medical attention immediately.

CLOTHING/EQUIPMENT: Wash area with large amounts of cold water. Neutralize acid with baking soda or household ammonia.

Failure to follow this procedure could cause DEATH or serious injury.

WARNING

The operator must exercise sound judgment in positioning outriggers. The outriggers should not be set near holes, on rocky ground or on extremely soft ground. Setting outriggers in such locations may result in the vehicle tipping, causing DEATH or serious injury.

WARNING

The LRT 110 Crane must be level prior to extending boom or lifting loads. To achieve this condition, outriggers should be extended to lift carrier wheels off the ground. Use bubble level next to the operator's seat to insure that vehicle is level. The bubble must be centered in circle. Failure to follow this procedure could cause DEATH or serious injury.

WARNING

Hook latch is intended to retain loose slings or devices under slack conditions. It is not intended to be an anti-fouling device. Caution should be used to prevent the latch from supporting any of the load. Periodic inspection of latch must be made to insure its proper operating condition. Failure to follow this procedure could cause DEATH or serious injury.

WARNING

An operator must be guided by the Capacity Chart mounted on vehicle when considering load weights. Rated loads must never be exceeded. Failure to follow this procedure could cause DEATH or serious injury.

WARNING

The intent of the information is to prevent any possibility of either reverse winding of the rope on the winch drum, causing breakage of winch cable, or the unseating of cable from winch drum, resulting in uncontrolled fall of the hook block and load. Failure to follow this procedure could cause DEATH or serious injury.

WARNING

Never lift and swing a load directly over operator's compartment or over ground personnel in the work area. Failure to follow this procedure could cause DEATH or serious injury.

WARNING

Using an axe or hatchet to cut wire rope may be dangerous. If necessary to use, proceed with great caution. Failure to follow this procedure could cause SERIOUS INJURY. Portable hydraulic and mechanical rope cutters are available. In remote areas, however, it may at times be necessary to use less desirable cutting methods.

WARNING

Incorrect cable type or size will not function properly and may be dangerous when used. Failure to follow this procedure could cause DEATH or serious injury.

WARNING

Make certain slings, ties and hooks are of sufficient capacity, properly set and secure before performing any lift operation. Failure to follow this procedure could cause DEATH or serious injury.

WARNING

- Always use a qualified signalman and observe load while the equipment is in operation.
- When spotting a load, it may become necessary to alter the boom angle or length, If adjustment is necessary, consult the LRT 110 Capacity Chart before performing a lift. Failure to follow this procedure could cause DEATH or serious injury.

WARNING

Exhaust gases can produce symptoms of headache, dizziness and loss of muscular control. DEATH, permanent brain damage or other serious injury may be caused by exhaust gases.

If exhaust gases or exposure symptoms are observed, ventilate the area immediately and treat affected personnel:

- Administer artificial respiration, if required.
- Expose affected personnel to fresh air.
- Keep affected personnel warm.
- Do not permit physical exertion.
- Refer to FM 21-11, First Aid For Soldiers for a more detailed description of treatment procedures.

WARNING

Never operate equipment with personnel on the hook or a load. Failure to follow this procedure could cause DEATH or serious injury.

WARNING

Crane operators must always be prepared to take emergency action while a load is suspended in the air. Never leave the operator's compartment with a load suspended. Failure to follow this procedure could cause DEATH or serious injury.

WARNING

Keep all parts of body and tools away from moving cable. Failure to follow this procedure could cause DEATH or serious injury.

WARNING

Never allow boom or load to swing into power lines. If the crane must be operated in the vicinity of power lines, follow these safety precautions:

- Contact the power company and have all power lines and ground wires turned off.
- Never allow any portion of the equipment, including cable, hook block, lines and load, closer to power lines than the distances shown on the Electrical Warning (Danger) Decal.
- Know the maximum height and reach of the crane and erect a suitable barricade around all power sources.
- Warn all personnel in the work area of the power source and electrocution hazard.
- If contact with a power source does occur, DO NOT STEP OFF THE CRANE. Stay on the vehicle until the power is turned off or the equipment is lowered and clear of the power source.
- If fire or other conditions force the operator to leave the crane, jump off and away, keeping all parts of the body clear of the equipment.

Failure to follow these procedures could cause DEATH serious injury.

WARNING

Diesel fuel and other combustible materials are used in the operation and maintenance of this equipment. Do not smoke or allow open flames in areas where combustible materials are stored or used. Failure to follow this procedure could cause DEATH or serious injury.

WARNING

No personnel are permitted on the deck while rotating upperstructure. Failure to follow this procedure could cause DEATH or serious injury.

WARNING

Improperly attached wire rope terminals lead to serious or possibly unsafe conditions. Failure to follow this procedure could cause DEATH or serious injury.

WARNING

When using U-bolt clips, extreme care must be exercised to make certain that they are attached correctly. Failure to follow this procedure could cause DEATH or serious injury.

WARNING

Failure to make a termination in accordance with the instructions, or failure to periodically check and retighten to the recommended torque, will cause a reduction in efficiency rating, which could cause DEATH or serious injury.

WARNING

Failure to install wedge sockets in accordance with the instructions could cause DEATH or serious injury.

WARNING

Clamp the dead end close to the socket to prevent the rope and wedge from disengaging from the socket. Failure to follow this procedure could cause DEATH or serious injury.

WARNING

During the execution of this procedure, the danger exists of uncontrollably dropping a load. Rotate the upperstructure to a safe position. Failure to follow this procedure could cause DEATH or serious injury.

WARNING

Entry of air into lowering port will cause winch motor to cavitate. The winch motor lowering port tee must be capped to prevent load from free falling when hand pump pressure is applied. Failure to follow this procedure could cause DEATH or serious injury.

WARNING

When working the hand pump, clear all personnel from the area. Failure to follow this procedure could cause DEATH or serious injury.

WARNING

When lowering boom to a horizontal position, work from side of upperstructure, not under boom. Failure to follow this procedure could cause DEATH or serious injury.

WARNING

Everyone must be clear of the area before moving hoist control lever. Failure to follow this procedure could cause DEATH or serious injury.

WARNING

Starting fluid is toxic and highly flammable. Container is pressurized to act as an expellent. Do not heat container and do not discharge starting fluid in confined areas or near an open flame. Failure to follow this procedure could cause SERIOUS INJURY.

WARNING

Adequate ground bearing support must be provided for the outrigger when operating on soft surface. Be alert for signs of LRT 110 Crane movement during operations. Failure to follow this procedure couild cause DEATH or serious injury.

WARNING

Never use less than the number of parts of line called for by the Capacity Chart. Failure to follow this procedure could cause DEATH or serious injury.

WARNING

Within the 85-dB envelope, hearing protection is required. Failure to follow this procedure could cause SERIOUS INJURY.

WARNING

All notes on the Capacity Chart must be treated as WARNINGS. Failure to follow these procedures could cause DEATH or serious injury.

WARNING

When use of a work platform is least hazardous to personnel and is the only practical means of accomplishing a task, make certain all personnel follow minimum safety procedures. Failure to follow these procedures could cause DEATH or serious injury.

WARNING

Read and understand all safety precautions before attempting an operation using a work platform. Failure to follow this procedure could cause DEATH or serious injury.

WARNING

All safety procedures and criteria established are the MINIMUM requirements for use of a work platform on the LRT 110 Crane. Applicable government and industry standards must also be adhered to. Failure to follow this procedure could cause DEATH or serious injury.

WARNING

Never use a work platform if inspection indicates a structural or mechanical fault of any kind. Failure to follow this procedure could cause DEATH or serious injury.

WARNING

No personnel are permitted on the work platform during the performance of any test. Do not allow personnel on work platform if any test procedure indicates a malfunction in equipment. Failure to follow this procedure could cause DEATH or serious injury.

WARNING

No operations with a work platform are authorized "on tires." Always make certain the LRT 110 Crane is on a stable surface with the outriggers fully extended. Failure to follow this procedure could cause DEATH or serious injury.

WARNING

Never use a work platform near energized power lines or ground cables. Failure to follow this procedure could cause DEATH or serious injury.

WARNING

Never allow electrically connected electrode holders to contact metal components of a work platform. Electrode holder contact can cause burning and/or melting of work platform suspension which could allow the work platform to fall. Failure to follow this procedure could cause DEATH or serious injury.

WARNING

Dry cleaning solvent P-D-680 used to clean parts is toxic and flammable. Use only in well ventilated areas and avoid contact with eyes, skin or clothing. Wear the proper protective clothing and equipment: goggles or safety glasses, face shield and gloves. Do not breath vapors. Do not use near sparks or open flames and do not smoke while using it. Failure to follow this procedure could cause DEATH or serious injury.

WARNING

Compressed air used for cleaning purposes must not exceed 30 psi (207 kPa). Safety glasses must be used when cleaning parts. Failure to follow this procedure could cause DEATH or serious injury.

General Cautions

In addition to personnel hazards, the operator is also responsible for avoiding potential damage to equipment.

CAUTION

When removing hook block from storage bracket, pay out cable while raising boom to prevent damage to windshield.

CAUTION

DO NOT use a torque wrench for removal purposes. Failure to follow this procedure could cause damage to equipment.

CAUTION

Make sure three sheaves and cable are in alignment with boom. Failure to follow this procedure could cause damage to equipment.

CAUTION

Keep all hoses out of the way when lowering upperstructure. Make sure the winch extension hoses are not pinched against the outrigger beam as the upperstructure is lowered. This could result in damage to the extension hoses.

CAUTION

Do not allow outrigger beam, located under upperstructure, to contact winch hoses. Failure to follow this procedure could cause damage to equipment.

CAUTION

Make sure the base plate opening clears the connections on the rotary manifold. Failure to follow this procedure could cause damage to equipment.

CAUTION

When attaching hook block to hook block tieback, take up cable slowly while lowering boom to prevent damage to windshield.

CAUTION

Do not make directional changes between forward and reverse while vehicle is in motion. Failure to follow this procedure could cause damage to equipment.

CAUTION

Do not attempt to move the vehicle with the parking brake engaged. Failure to follow this procedure could cause damage to equipment.

CAUTION

Never operate engine with oil level below the ADD 1 QT mark or above the FULL mark. Failure to follow this procedure could cause damage to equipment.

CAUTION

Keep tension on cable to prevent damage from slack.

CAUTION

If disconnect system malfunctions and **hook** block is drawn into the boom point, vehicle may be damaged. Care should be taken when performing disconnect test.

CAUTION

If any gauge fails to operate, shut engine off and notify maintenance. Failure to follow this procedure could cause damage to equipment.

CAUTION

Release starter button as soon as the engine starts. If engine stalls during start-up procedure, allow engine to stop revolving before re-engaging starter. Failure to follow this procedure could cause damage to equipment.

CAUTION

When operating on hard surfaces, use two-wheel drive only. Failure to do so may result in severe drive line “wind-up” and component failure.

CAUTION

Speed is not to exceed 25 mph (40 km/h). Failure to follow this procedure could cause damage to equipment.

CAUTION

Traveling with high transmission temperature (above 250 degrees F [121 degrees C]) can cause damage to vehicle. Do not shut engine off when transmission is overheating.

CAUTION

Never shift between forward and reverse while the LRT 110 Crane is in motion. Failure to follow this procedure could cause damage to equipment.

CAUTION

Downshifts should not be made when vehicle speed exceeds maximum speed of next lower range. Downshifting at excessive speeds will overspeed drive train components and cause damage to drive shafts

CAUTION

Do not operate for extended periods with wide-open throttle at speeds below minimums shown. Failure to follow this procedure could cause damage to equipment.

CAUTION

Under emergency or extreme traveling circumstances, it is possible to stop the LRT 110 Crane with the parking brake. However, this results in rapid brake wear. After stopping 3 or 4 times by this method, parking brake adjustment should be made. Failure to follow this procedure could cause damage to equipment.

CAUTION

A dirty cab can result in damage to instruments and controls.

CAUTION

Always consider possible obstructions which may be encountered during swings when varying boom height or length. Think swing through, considering all obstacles, before making swing. Failure to follow this procedure could cause damage to equipment.

CAUTION

Never hold controls in an “activated’ position once hoist/lower cylinder or extend/retract cylinder has reached its limit of travel, This can cause overheating of hydraulic oil.

CAUTION

ALWAYS START AND STOP SWINGS GRADUALLY. Stopping swing too abruptly will cause load to oscillate and impose side loads on boom. This will cause damage to boom.

CAUTION

Never pull to the side with a crane boom. Crane booms are not designed for excessive side pull and may collapse if subjected to excessive side loading.

CAUTION

Do not continue to pull block up after contact has been made with boom head. This will result in damage to boom head and sheaves. The cable may also be broken, causing load to drop.

CAUTION

When spotting load, it may be necessary to alter boom length or boom angle. In making these adjustments, the operator must guard against exceeding rated load as determined by the Capacity Chart. Failure to follow this procedure could cause damage to equipment.

CAUTION

Insufficient tire pressure reduces the "On Tires" capacity. Attempts to pick rated capacity without properly inflated tires may cause vehicle to tip and/or result in damage to tires and rims.

CAUTION

Traveling over uneven terrain with rear axle oscillation locked out can result in instability. Excessive boom length can also cause instability depending on terrain and wind pressure. Failure to follow this procedure could cause damage to equipment.

CAUTION

Never use a chromate-base corrosion inhibitor when coolant contains ethylene glycol. Use only nonchromate-base inhibitors. Chromate-base inhibitors reacting with ethylene glycol can produce chromium hydroxide, commonly known as "green slime." This substance reduces the heat transfer rate and can cause serious engine overheating.

CAUTION

Water added to battery can freeze before it mixes with electrolyte. During very cold weather, add water to battery just prior to, or during operation of, vehicle. If vehicle is not to be run, connect an external charger to battery if adding water.

CAUTION

BE ALERT FOR SIGNS OF PUMP CAVITATION. The hydraulic oil provides lubrication for pumps. When too heavy or stiff, it will not flow fast enough to meet pump demand and a vacuum or "cavitation" will be created. A "screaming" noise indicates inadequate pump lubrication and, if allowed to continue for more than a short period, will result in serious damage to pumps.

CAUTION

If the LRT 110 Crane is to be towed a distance of more than 1 mile (1.6 km) and/or at speeds greater than 3 mph (4.8 km/h), the front driveshaft must be disconnected from the front axle. As an alternative to disconnecting the driveshaft, if (he engine is operable, the engine may be started and allowed to idle during the towing process. This will circulate lubricant in the transmission, lubricating the clutches during the towing operation. Failure to disconnect the driveshaft or to run the engine will cause internal damage to the transmission as the vehicle is towed.

CAUTION

The tow bar MS500048 is the only tow bar to be used on this vehicle. If not available, see organizational maintenance. Failure to follow this procedure could cause damage to equipment.

CAUTION

Be certain correct socket and wedge as supplied are used. Failure to follow this procedure could cause damage to equipment.

CAUTION

Loops formed by overrun can cause kinks and dog legs in the cable, resulting in damage and premature cable failure.

CAUTION

Never use a steel hammer or pinch bar to move cable over on drum. These tools can easily damage cable.

CAUTION

If traveling more than five miles on improved roads or two miles on rough terrain or unimproved roads, remove anti-two block weight and chain from the switch and secure it to the anchor point of the wedge socket located either on the boom head or hook block, whichever is accessible. Failure to follow this procedure could cause damage to the hook block switch.

Safety Decals

WARNING

Read and follow all safety decals. Failure to follow this procedure could cause DEATH or serious injury.

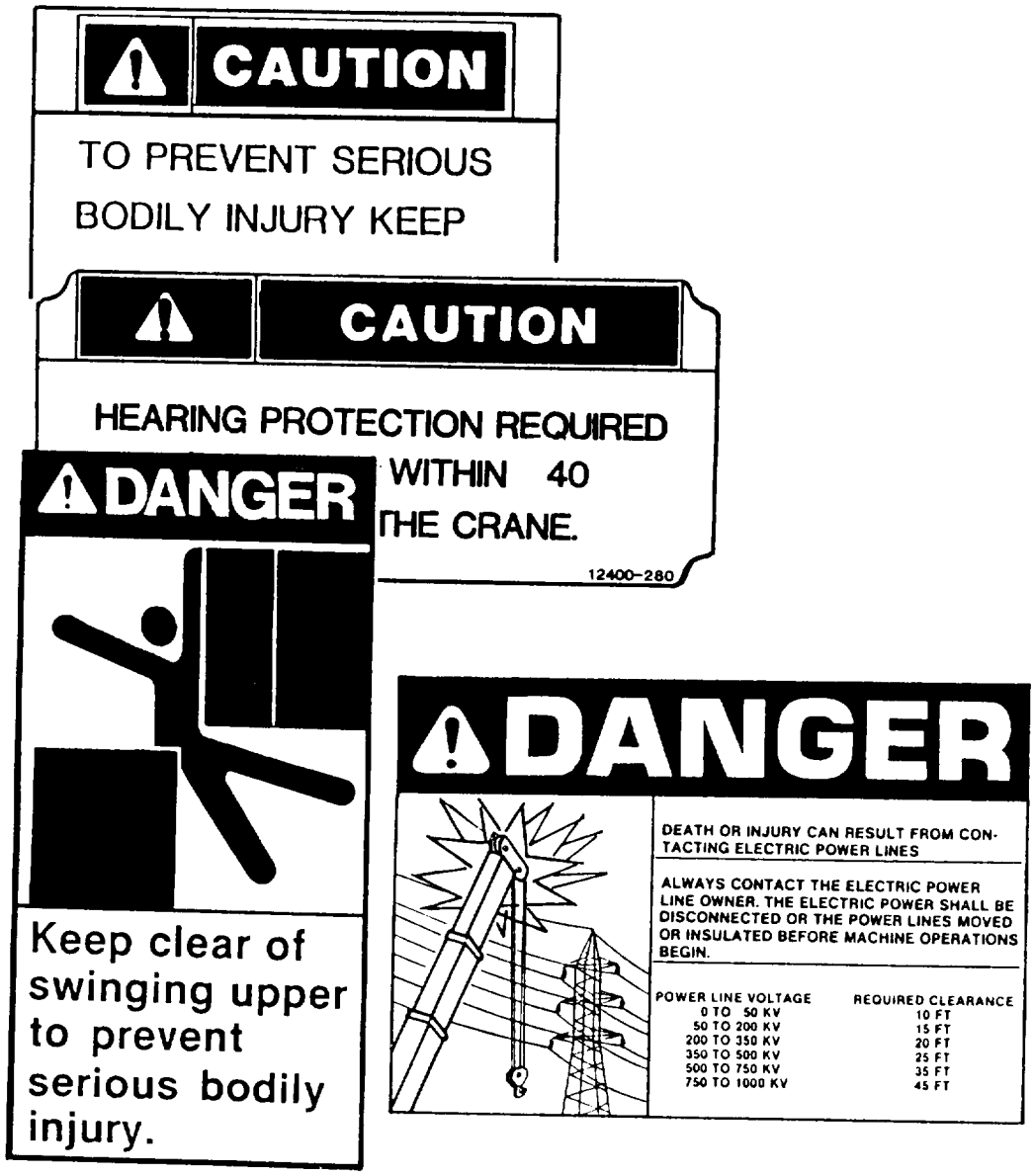

Figure 1-10. *Safety Decals*

Minimum Safety Requirements for Work Platforms Suspended From Load Line or Rigidly Mounted on Boom

General

WARNING

When use of a work platform is least hazardous to personnel and is the only practical means of accomplishing a task, make certain all personnel follow these minimum safety procedures. Read and understand all safety precautions listed in this section before attempting an operation using a work platform. All safety procedures and criteria established in this section are the MINIMUM requirements for use of a work platform on the LRT 110 Crane. Applicable government and industry standards must also be adhered to. Failure to follow this procedure could cause DEATH or serious injury.

There are two methods for mounting a work platform on the LRT 110 Crane. The first is to suspend the work platform from the load line. The second is to rigidly mount the work platform to the boom.

Before attempting any operation using a work platform, all of the conditions listed here must be met, including crane equipment and work platform requirements and procedures for inspection, rigging, testing and operation.

LRT 110 Crane Equipment Requirements For Use of a Work Platform

1. The LRT 110 Crane must be in compliance with PCSA Std. No. 4 and ANSI B30.5-1982.

2. In addition, the following equipment and/or controls must be included and functioning on the LRT 110 Crane:

   a. For use of a work platform suspended from a load line:

      - An operable anti-two block warning device which automatically deactivates the control function bringing about the two-blocking condition.
      - A boom angle indicator.
      - Capacity Chart (refer to page 1-19).
      - A boom extension indicator,
      - A winch drum rotation indicator.

   b. For use of a work platform rigidly mounted to the boom:

      - A boom angle indicator.
      - Capacity Chart (refer to page 1-19).
      - A boom extension indicator
      - A means to rigidly attach a Koehring supplied and/or approved work platform to the boom tip.

LRT 110 Crane Work Platform Requirements

1. Work platforms suspended from a load line or rigidly mounted to the boom shall comply with all applicable government and/or industry standards relating to design and manufacture, including, but nor limited to, ANSI A92.2-1979.

   a. Design considerations for a work platform suspended from a load line include:

      - Material and design safety factors.
      - Construction, including fasteners and welding.
      - Flooring.
      - Hand rails.
      - Toe boards.
      - Safety lanyard attachments.
      - Gates.
      - Hoisting and tag line attachments.
      - Load limit, occupant limit and work platform weight instructions on labels and warnings.

   b. Design considerations for a work platform rigidly mounted to the boom include:

      - Material and design safety factors.
      - Construction, including fasteners and welding.
      - Flooring,
      - Hand rails.
      - Toe boards.
      - Safety lanyard attachments.
      - Gates.
      - A means of adjusting and locking the work platform level.
      - Load limit, occupant limit and work platform weight instructions on labels and warnings.

2. Specifications for a work platform must be in writing and must describe the platform weight, load and occupancy limit, method of platforms inspection and maintenance and procedures for attachment to the LRT 110 Crane. The above, plus any appropriate precautionary information applicable to the platform must be permanently placed either in the vehicle or on the work platform.

Inspection, Rigging, Testing and Operating a Work Platform for the LRT 110 Crane

1. The inspection, operation and safety requirements for a work platform suspended from a load line or rigidly mounted to the boom must at all times comply with PCSA Std. No. 4 and all appropriate government regulations.

2. In addition, all of the following limitations and minimum safety requirements apply:

WARNING

Never use a work platform if inspection indicates a structural or mechanical fault of any kind. Failure to follow this procedure could cause DEATH or serious injury.

a. Inspection: A complete inspection of the LRT 110 Crane and the work platform must be performed prior to any operation.

Inspection is to be performed daily or each time the operator is replaced or the LRT 110 Crane is converted from material to personnel handling.

Inspection must include the boom and all mechanical and rigging equipment vital to the safety of work platform operation.

Before a work platform suspended from a load line may be used, the following additional inspections must be performed:

- Inspection of hook and wire rope.
- Daily inspection of load line.
- The anti-two block device must be calibrated to sound a warning and deactivate the control function bringing about the two-blocking condition whenever the hook block assembly, platform or fall ball assembly is less than 3 ft (914 mm) from the boom tip.
- Inspect hook latches on fall ball assemblies and sheave block assemblies making certain they close and lock, eliminating hook throat openings and are full-load bearing hook latches with manual trigger releases. As an alternative, shackles with bolts, nuts and retaining pins may be used.
- Inspect wire rope ends making certain they are properly anchored to boom, fall ball, hook blocks and drums (refer to page 2-3).
- With the boom at maximum elevation and the work platform on the ground or at its lowest operational level, inspect the hoist drum making certain at least three wraps of wire rope remain.
- Make certain the minimum safety factors for wire rope are adhered to at all times.

Use 7:1 as the minimum safety factor for manufacturer's specified wire rope and 10:1 as the minimum safety factor for rotation resistant rope for the combined weight of lifting attachments, platform, personnel and tools.

WARNING

No personnel are permitted on the work platform during the performance of any test. Do not allow personnel on work platform if any test procedure indicates a malfunction in equipment. Failure to follow this procedure could result in DEATH or serious injury.

b. Testing: The following daily test procedures are to be performed on the LRT 110 Crane and the work platform whenever the operator changes or a significant change in lifting conditions occurs.

To test the work platform and equipment, use the following procedure:

1. Load the work platform with ballast at least 2 times the weight of intended load.

CAUTION

Acceleration and deceleration must be smooth and controlled. Failure to follow this procedure could cause damage to equipment.

2. Raise and lower the load at maximum line speed.

3. Test the control/braking function by bringing the load to a smooth stop.

4. The specific operation to be undertaken shall be performed in its entirety.

5. When the test is completed, inspect the work platform and equipment for any evidence of damage or defect.

All limiting and warning devices shall be activated by each control function which may create a two-blocking condition.

WARNING

No operations with a work platform are authorized "On Tires," Always make certain the LRT 110 Crane is on a stable surface with the outriggers fully extended. Failure to follow this procedure could cause DEATH or serious injury.

c. Operation and safety: Always observe the following operation and safety procedures before using a work platform:

- Make certain the LRT 110 Crane is level and stable, with outriggers fully extended on a solid, level surface.

- Make certain the operator is experienced and in good physical and emotional condition.

- Make certain the operator does not leave his station. While the work platform is in use, the operator is to remain in the vehicle with the engine running.

- All unauthorized personnel will leave the LRT 110 Crane working area while a work platform is in use.

- All operations using a work platform must be planned by the operator along with supervisors, signal personnel and personnel to be lifted prior to the operation.

- The crane operator must avoid any sharp or sudden movements while a work platform is in use.

WARNING

Never use a work platform near energized power lines or ground cables. Failure to follow this procedure could cause DEATH or serious injury.

- Always maintain at least twice the distance from power lines required by OSHA 29CFR, Part 1910, while a work platform is in use.

- Make certain the combined weight of the work platform plus any attachment devices, personnel, tools and equipment does not exceed 1/2 of the lifting capacity specified by the Capacity Chart (refer to page 1-19).

- Never travel the LRT 110 Crane while a work platform is occupied.

- Make certain that no more than one crane function at a time is operated while the work platform is in use.

- Make certain personnel have radio or telephone communication with the crane operator at all times while the work platform is in use.

In the event of a communication failure, personnel on the work platform must be returned to the ground immediately using hand signals, No operations using a work platform are to performed without functioning communication equipment.

If other cranes or equipment are in the area of a work platform operation, communication between all machine operators will also be maintained.

- Make certain work platforms are not used in winds on excess of 10 mph (16 km/h), rain, snow, ice, sleet, electrical storms or other adverse conditions.

- Make certain personnel never stand on top rail, midrail or toe board of work platform.

- Make certain personnel keep all parts of the body, tools and other equipment inside the work platform area during raising or lowering operations.

- Before positioning a work platform, make certain the vehicle is away from any overhead obstacles.

- Before a work platform is raised or lowered, make certain all ropes, electrical cords, hoses, etc. are free from entanglement.

- After positioning a work platform, make certain all locks are set before any work is performed.

- When off the ground, make certain the work platform is secured before personnel enter or leave.

When working from a work platform, belting off or otherwise attaching a work platform to an adjacent pole, structure or other equipment shall not be permitted, except when personnel are entering or leaving the work platform.

- Make certain all movement by personnel on a work platform is done in a slow and controlled manner.

- Make certain personnel on the work platform wear safety belts with lanyards attached to hook or shackle.

- Lifting a work platform is a single crane operation. Never use more than one crane to lift a work platform.

- Never use a work platform to lift an external load.

WARNING

Never allow electrically connected electrode holders to contact metal components of a work platform. Electrode holder contact can cause burning and/or melting of work platform suspension which could allow the work platform to fall. Failure to follow this procedure could cause DEATH or serious injury,

- If a welding operation is to be performed, make certain electrode holders do not contact metal components of the work platform.

- When the work platform is suspended from a load line, a stabilizing tag line must be attached to the work platform and controlled to minimize any swaying motion.

CHAPTER 2
PREPARATION FOR USE

The purpose of this chapter is to familiarize the operator with the preparation of cable for use.

Title	Page
Hoist Line Reeving	2-2
Installing Wedge Socket On Cable	2-3
Spooling Cable On Drums	2-3
Installing Cable On Winch	2-4

Hoist Line Reeving

When reeving the machine in preparation for any job, it should be kept in mind that hoisting and lowering speeds decrease as the number of parts of line increases. For most efficient use of the LRT 110 Crane, it is therefore desirable to use minimum required number of parts for lifting.

WARNING

Never use less than the number of parts of line called for by the Capacity Chart. Failure to follow this procedure could cause DEATH or serious injury.

To determine the number of parts needed, refer to the Capacity Chart, page 1-21.

1. Remove socket and wedge from cable and thread it through the hook block for 2-part and 3-part reeving (Figure 2-1).

2. When required number of parts has been determined, reeve cable as shown.

3. Attach a wedge-type cable socket to cable dead end and secure it to either the boom head or hook block as required.

4. Dead end cable on hook block for an odd number of line parts, and on boom peak for an even number of parts.

The crane has sufficient cable provided to allow hook to reach ground level with any boom length and elevation when reeved with minimum parts of line required for the load being lifted.

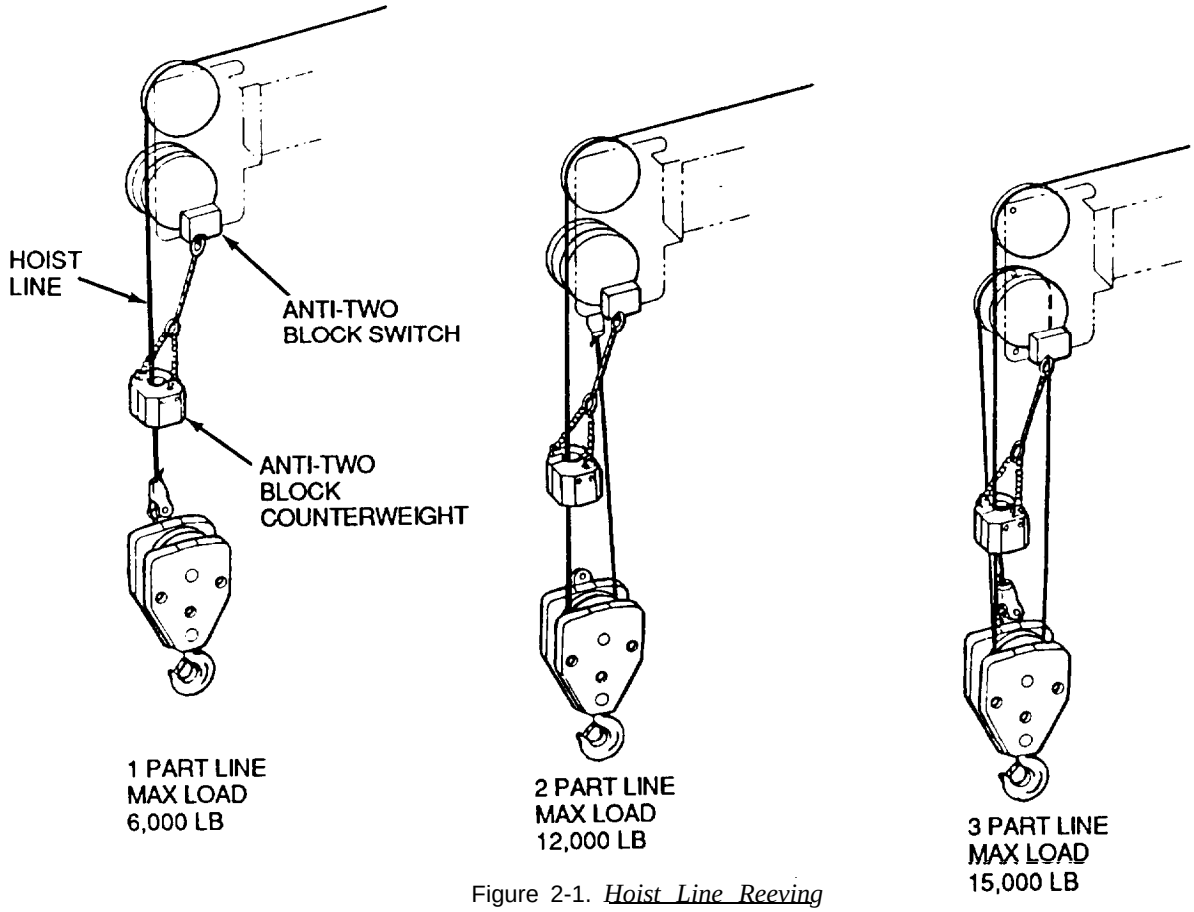

Figure 2-1. *Hoist Line Reeving*

Installing Wedge Socket on Cable

CAUTION

Be certain correct socket and wedge as supplied are used. Failure to follow this procedure could cause damage to equipment.

When installing wedge-type sockets on cable, use the following procedure:

1. Lead cable through socket and forma large loop. Draw cable end back through socket approximately 2 in. (50.8 mm) (Figure 2-2).

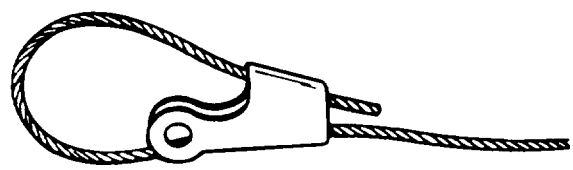

Figure 2-2. *Cable Loop*

2. Insert wedge and allow cable strands to adjust around it (Figure 2-3).

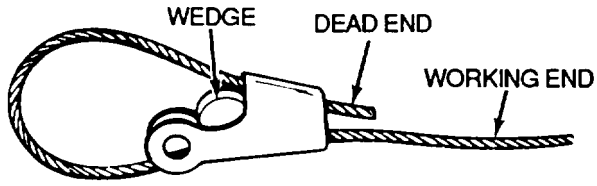

Figure 2-3. *Inserted Wedge*

3. Seat wedge and loop just tightly enough to allow handling by attaching socket to a strong support and engaging winch to take a strain on cable.

4. Make lifts of gradually increased loads until wedge is finally seated. Avoid imposing shock loading on cable until wedge is firmly in place.

5. With no more than 2 in. (50.8 mm) of cable protruding, clamp dead end of cable with a cable clamp (Figure 2-4).

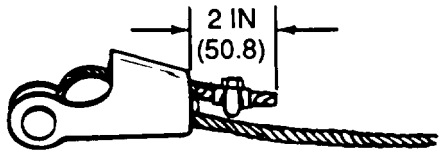

Figure 2-4. *Clamped Cable*

Spooling Cable on Drums

Care must be exercised when installing cable on winch drum. Improper spooling can result in cable damage through crushing, kinking, dog legs, abrasion and cutting. Poorly installed cable will also adversely affect operating characteristics of machine by causing uneven application of force and motion. This, in turn, can cause premature fatiguing and failure of cable.

1. Inspect and clean winch thoroughly before proceeding with installation.

2. Check lagging and drum flanges for cracks, breaks and excessive wear.

3. Check for deformed or outsized drum and excessive undercutting at base of flange. These indicate that repair or replacement of drum is necessary.

4. After correcting any defects revealed by inspection and determining that the winch is in good operating condition, spool cable (refer to Chapter 4, Section V, Wire Rope Instructions, page 4-28).

5. Place a pipe or bar through the reel center.

6. Mount the cable shipping reel with the bar horizontal on jacks or a suitable supporting structure (Figure 2-5).

7. Draw the cable from the top of the reel, in order to avoid reverse bending as it is spooled onto the winch drum.

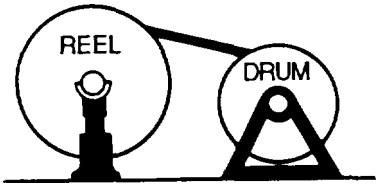

Figure 2-5. *Spooling Cable on Winch Drum*

CAUTION

Loops formed by overrun can cause kinks and dog legs in the cable, resulting in damage and premature cable failure.

8. Apply braking force to the reel flange to prevent overrun as the cable is being drawn off.

9. Using a timber or block, apply force against the shipping reel flange to provide the required breaking force.

Installing Cable on Winch

Install cable on winch drum in accordance with the following procedure:

1. Position cable over boom tip sheave and route back to winch drum.

2. Position winch drum with cable anchor pocket on top.

3. Insert cable into small opening of cable pocket. Loop cable around clamp and back into pocket about 3/4 of the way through the pocket. Use cable clamp for 1/2 in. cable (refer to Koehring Commercial Parts Manual). Insert small end first. Pull on cable and the clamp will slip into the pocket, securing the cable (Figure 2-6).

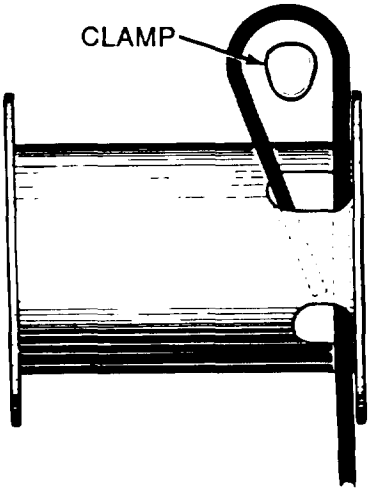

Figure 2-6. *Securing Cable on Winch*

4. Rotate the drum slowly to insure that first layer of cable is evenly wound onto drum.

5. Install remainder of cable. Tension cable by braking shipping reel and slowly operate winch in the raise mode to wind cable onto winch drum.

CAUTION

Never use a steel hammer or pinch bar to move cable over on drum. These tools can easily damage cable.

6. Using a lead or brass hammer, tap cable over against preceding turns, making sure that adjacent turns are tight against one another.

   After cable is wound onto winch drum, reeve cable as desired.

CHAPTER 3
GENERAL THEORY OF OPERATION

The purpose of this chapter is to provide the operator with a general description of the LRT 110 Crane and an overall view of its components and their functions.

Title	Page
General Theory of Operation	3-2
Transmission Theory of Operation	3-2
Axle Theory of Operation	3-2
Winch Theory of Operation	3-3

General Theory of Operation

The LRT 110 Crane is a self-contained vehicle featuring 7 1/2 ton maximum lifting capacity, optional four-wheel drive, outriggers for added stability during lifting operations and three different steering modes: front wheel steering for normal driving, crab steering for diagonal moves and four-wheel steering for minimum-radius turns.

Power originates from an in-line, four-cylinder, diesel engine mounted at the rear of the vehicle. The transmission is mounted directly on the engine and is used to turn drive shafts and to power the tandem hydraulic pump. One-half of the tandem hydraulic pump supplies hydraulic pressure to the winch, and the other half supplies hydraulic pressure to actuate the boom telescope cylinder, boom hoist cylinder, boom swing motor, outrigger cylinders, axle lockout cylinders and steering controls, and to provide hydraulic assistance for the brake system.

The boom is a two-section telescope-type with a rotating boom support. Two large-diameter, double-acting hydraulic cylinders telescope and hoist the boom assembly. The hydraulic swing motor and worm gear rotate the upperstructure. The cable and hook block assembly are operated by the hydraulic winch. The hydraulic and electrical systems on the upperstructure are connected to the rest of the vehicle by the hydraulic rotary manifold and electrical collector ring.

Transmission Theory of Operation

The transmission is capable of four-speed shifting in both forward and reverse. Direction and speed are selected through hydraulically actuated multiple-disc clutches. The clutches are power absorbing, allowing shifts under full engine power in both forward and reverse. The clutches are hydraulically controlled and spring released. Hydraulic control makes the clutches self-adjusting. Each clutch is made of friction plates and polished-steel reaction plates.

The transmission receives power from the engine through the torque converter. The torque converter is fluid driven, creating a smooth and shock-free drive. Fluid drive also eliminates engine stalling and lugging when vehicle has a heavy load. With light loads, the torque converter is able to transmit engine power directly to the transmission at most engine speeds with no torque multiplication. This provides variable and automatic speed ratios, reducing need for shifting gears.

Axle Theory of Operation

The front and rear axles have remote breathers to allow operation in up to 30 in. (762 mm) of water. The rear axle has lockout cylinders to provide increased stability during hoisting. Steering for each axle is enhanced by dual-acting hydraulic cylinders which are tied together by a single tie rod which provides smooth, sharp, synchronized turning with minimum alignment and adjustment requirements. The service brakes are shoe-type hydraulic units, and are part of the axle. The front axle has a disc brake that can be used either as a parking brake or as an emergency brake. Each axle has its own differential.

Winch Theory of Operation

The winch is made up of four basic assemblies: winch base, hydraulic motor and brake valve, brake cylinder and motor support, and drum assembly. The hydraulic motor turns the gears in the drum assembly, working the cable.

The winch has a dual braking system: a dynamic brake and a static brake. These two types of brakes work together to control the speed of the drum assembly. The dynamic brake uses hydraulic pressure to operate the brake valve which controls the flow of hydraulic oil to the hydraulic motor, The static brake is made of multiple-friction discs, a brake clutch assembly, and a hydraulic piston and cylinder. The static brake is automatically applied unless it is released by brake valve pilot pressure at a level lower than that required to open the pilot-operated spool valve.

Either brake system does not affect the winch during hoisting operations. When the operator's control is placed in neutral, rollers between the cam and outer race wedge to prevent the drum assembly from turning. The brake valve stops oil flow from the hydraulic motor. For lowering a load slowly, the operator can allow only enough oil to release the brake without engaging the hydraulic motor. The heat build-up is dissipated by the hydraulic oil. For faster lowering, the hydraulic pressure is increased by the operator to both release the brake and engage the hydraulic motor.

CHAPTER 4
OPERATING INSTRUCTIONS AND FUNCTIONS

The purpose of this chapter is to familiarize the operator with controls and instruments necessary for the operation of the LRT 110 Crane. Included also are the Preventive Maintenance Checks and Services (PMCS) and vehicle operating procedures.

WARNING

Do not attempt to operate the LRT 110 Crane until all operating instructions have been read and understood. Knowledge of controls alone is inadequate preparation to operate this vehicle. Failure to follow this procedure could cause DEATH or serious injury.

Section	Title	Page
I	Use of Operator's Controls and Indicators	
	Controls and Instruments	4-3
II	Initial Adjustments and Control Settings	
	Checks and Inspections	4-10
	Operator Observations	4-11
	Cable Inspection	4-12
	Preventive Maintenance Checks and Services (PMCS)	4-13
	Operator Troubleshooting	4-15
III	start-up	
	Starting the Engine	4-17
IV	Operation Under Normal Conditions	
	Operating the Engine	4-18
	Before Moving the LRT 110 Crane	4-18
	Pre-Move Checklist	4-18
	Moving the Vehicle to a Job Site	4-18
	Upshifting and Downshifting Recommendations	4-20
	Stopping the Engine	4-20
	Lift Procedure on Outriggers	4-20
	Lift Procedure "On Tires"	4-25
	Hand Signals for LRT 110 Crane Operation	4-27
V	Wire Rope Instructions	
	Wire Rope Identification and Construction	4-28
	Wire Rope Installation	4-30
	Unreeling and Uncoiling	4-31
	Seizing Wire Rope	4-34
	Cutting Wire Rope	4-35
	End Fittings and/or Attachments	4-35
	Socketing	4-36
	Wire Rope Clips	4-37
	U-Bolt Clips	4-38
	Fist Grip Clips	4-39

Section	Title	Page
	Wedge Sockets	4-40
	Drums, Plain (Smooth)	4-42
	Flexibility of Wire Rope	4-42
	Breaking in a New Wire Rope	4-43
	Wire Rope and Operation Inspection	4-43
	Guideline to Inspections and Reports for Equipment, Wire Rope and Wire Rope Slings	4-44
	Wire Rope Inspection	4-45
	Illustrated Examples of Possible Wire Rope Damage	4-51
	Rope Inspection Summary	4-54
	Equipment Inspection	4-55
	Cable Lubrication	4-55
VI	Operation Under Emergency and Abnormal Conditions	
	Emergency Load Lowering Procedure	4-56
	Unusual Operating Conditions	4-64
VII	Shutdown	
	Vehicle Shutdown Procedures	4-71
VIII	Transportability	
	Land Transport	4-72
	Air Transport	4-74
	Rail Transport	4-75
	Marine Transportation	4-76

Section I
Use of Operator's Controls and Indicators

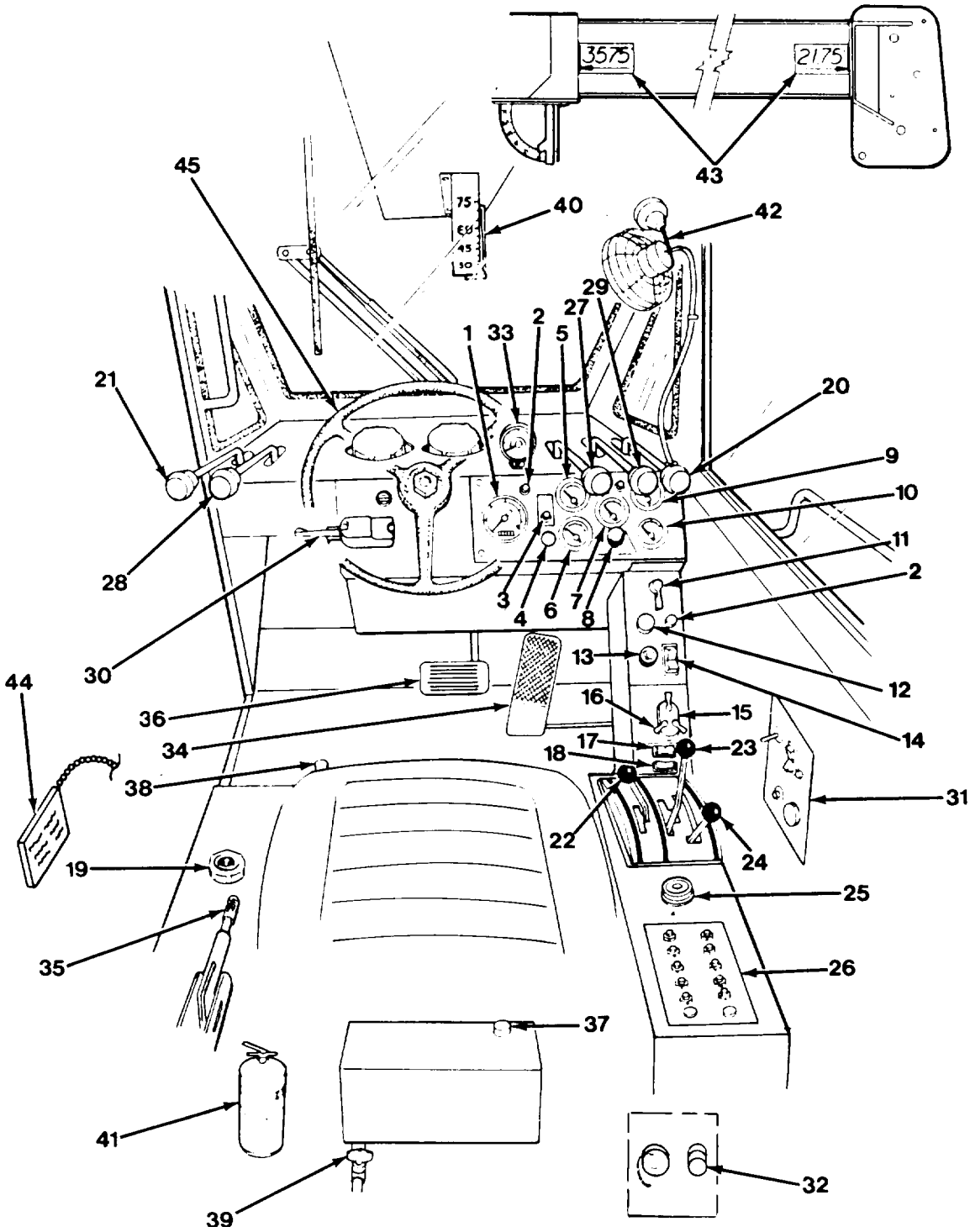

Figure 4-1. *Control and Instrument Identification.*

The controls and instruments are illustrated from operator's view point with the machine in travel position.

Controls and Instruments

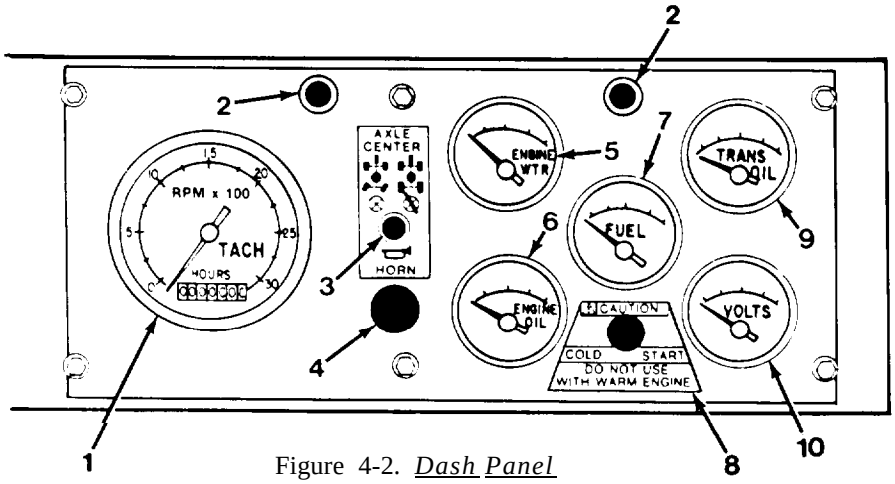

Figure 4-2. Dash Panel

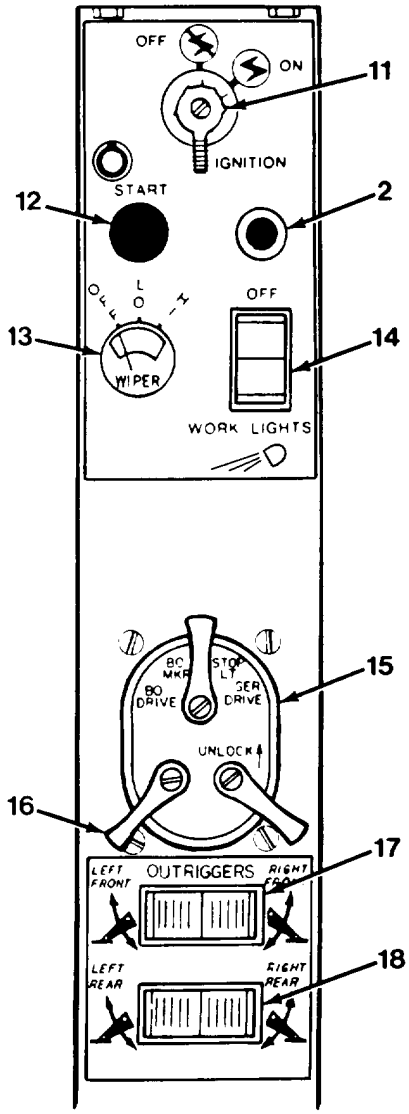

Figure 4-3. Slide Sloping Dash Panel

1. **Tachometer/Hour Meter** indicates engine rpm (normal idle 800 rpm; governed 2,950 rpm) and operating hours of engine (Figure 4-2).

2. **Dash Lights** illuminate dash panel and side sloping dash panel (Figure 4-3).

3. **Rear Axle Centering Indicator** light is off when axle is centered with wheels parallel to line of travel for two-wheel steering. Light is on when wheels are off center. When light is off, switch to two-wheel steering (Figure 4-2).

4. **Horn is** activated when pushed, and is deactivated when blackout lighting is used.

5. **Engine Water Temperature Gauge** indicates engine coolant temperature (temperature range is 140 to 220 degrees F [60 to 104 degrees C]; approximately 190 degrees F [88 degrees C] is normal operating temperature).

6. **Engine Oil Pressure Gauge** indicates engine oil pressure (idle of 10 psi [69 kpa] minimum to governed speed no load of 55 psi [379 kPa]; cold oil may read 90 psi [621 kPa]).

7. Fuel **Gauge** indicates amount of fuel in fuel tank.

8. **Cold Start is** recommended for ambient temperatures below 32 degrees F (O degrees C) and required at 10 degrees F (-12 degrees C) and below.

9. **Transmission Temperature Gauge** indicates oil temperature out of convertor (normal range is 160 to 190 degrees F [71 to 88 degrees C]; cool down is required above 250 degrees F[121 degrees C]).

10. **Voltmeter** indicates battery condition (24 volts is normal indication).

11. **Ignition Switch** turns electrical circuits ON and OFF, and stops engine in the OFF position (Figure 4-3).

NOTE

Starter will not activate unless transmission is in neutral.

12. **Starter Button** starts engine.

13. **Windshield Wiper Switch** has three positions: OFF, LO, and HI.

14. **Work Light Switch** turns three flood lights on and off, and is deactivated when blackout lighting is used.

15. **Vehicle Light Switch** provides on/off operation of service drive lights, stop lights, blackout marker and blackout drive lights.

16. **Dash Light Switch** turns dash panel and instrument lights on.

17. **Outrigger Switch (Front)** activates valve for independent operation of front left or right outriggers.

18. **Outrigger Switch (Rear)** activates valve for independent operation of rear left or right outriggers.

19. **Steering Selector** has three positions: four-wheel is full clockwise position, two-wheel is center position, and crab is full counterclockwise position. Switch to crab or four-wheel steering only when axles are centered (axle center indicator light is out), or steering will be limited and may be locked (Figure 4-4). If wheels should become locked, switch to two-wheel steering, turn front wheels, switch back to crab or four-wheel steering and center rear wheels.

20. **Outrigger Control** Lever raises or lowers outrigger beams. Each beam operates independently with control switches: pull to raise; push to lower (Figure 4-5).

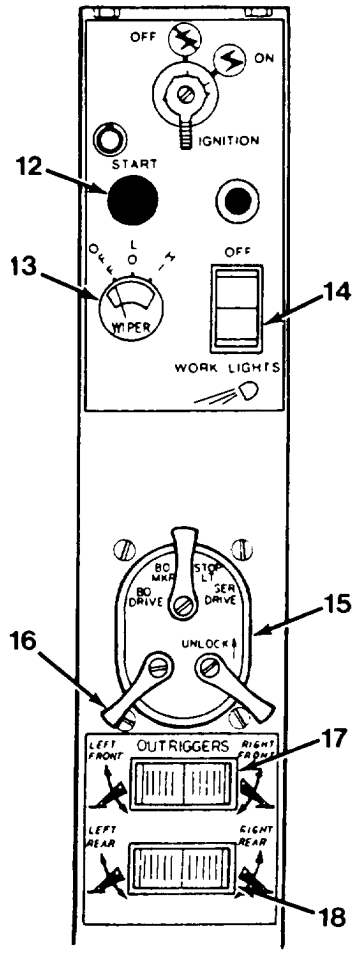

Figure 4-3. *Side Sloping Dash Panel*

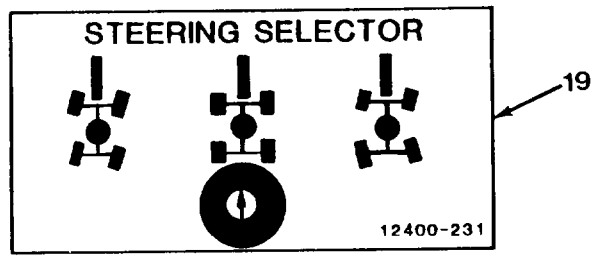

Figure 4-4. *Steering Selector*

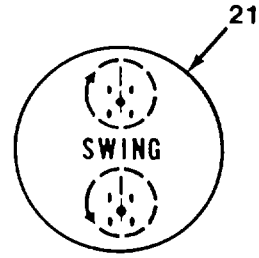

Figure 4-6. *Swing Lever*

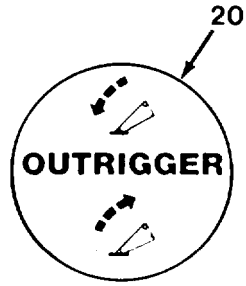

Figure 4-5. *Outtrigger Lever*

21. **Swing Lever** contols rotation of upperstructure: push to swing right; pull to swing left. When the upperstructure is 5 degrees off front center, rear axle pivot cylinders are locked into position to maintain stability for crane work (Figure 4-6).

CAUTION

Do not make directional changes between forward and reverse while vehicle is in motion. Failure to follow this procedure could cause damage to equipment.

22. **Forward-Neutral-Reverse Shift Lever selects** direction of travel. Must always be in neutral when starting engine and making crane lifts (Figure 4-7),

23. **Transmission Speed Shift Lever** has four transmission speeds from 1 thru 4 in either forward or reverse travel. Start travel in 1st gear.

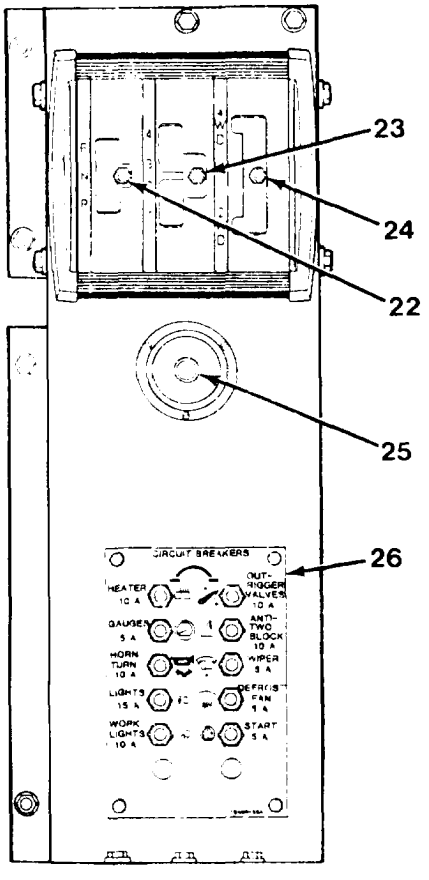

Figure 4-7. *Right Hand*

24. **Two Wheel-Four Wheel Drive Shift Lever** selects drive mode: two-wheel drive for hard-surface travel and four-wheel drive for off-road use. It may be necessary to creep to get gears to align.

25. **Bubble Level** indicates if vehicle is level prior to making a lift (level is with bubble in center of circle).

26. **Circuit Breakers** protect electrical circuits during minor electrical malfunctions. Circuit breakers must be reset if tripped.

27. **Boom Hoist Lever** raises or lowers boom: pull to raise boom; push to lower boom (Figure 4-8).

28. **Boom Telescope Lever** extends or retracts boom: push to extend boom; pull to retract boom (Figure 4-9).

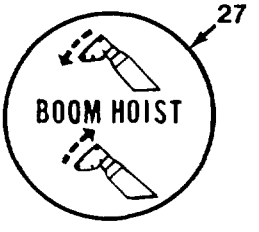

Figure 4-8. *Boom Hoist Lever*

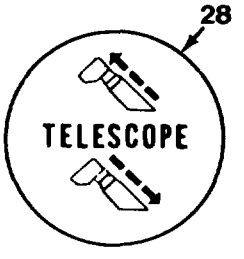

Figure 4-9. *Boom Telescope*

29. **Winch Lever** lowers or raises load: push to lower load; pull to raise load (Figure 4- 10).

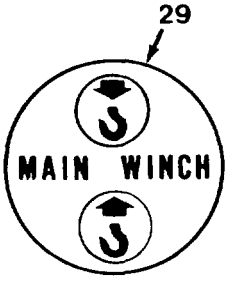

Figure 4-10. *Winch Lever*

30. **Turn Signal Lever** activates right- or left-hand turn signals, plus emergency flashers, and is deactivated when blackout lights are on (Figure 4-11).

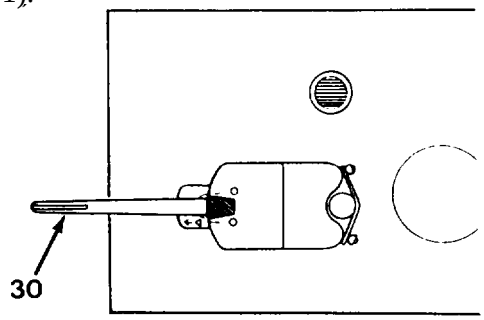

Figure 4-11. Turn *Signal Lever*

31. **Anti-Two Block Panel** is equipped with an audio/visual anti-two block warning system designed to alert operator of impending two-block conditions (i.e., the hook or hook block is being drawn into boom point sheaves). The vehicle is equipped with a shut-off disconnect system on the control linkage. It is activated when the hook block contacts the anti-two block counterweight: winch hoisting will cease, and boom will not extend or lower; raising and retracting boom and winch down functions will remain active. Appropriate counteraction should be taken to prevent two-blocking (Figure 4-12).

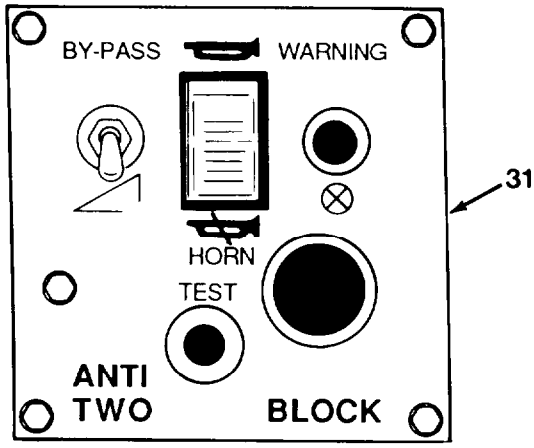

Figure 4-12. *Anti-two Block Panel*

Anti-Two Block Warning Light is a visual warning light to indicate approaching two-block condition.

Anti-Two Block Audible Horn Warning Switch is used to deactivate the audible warning system while traveling.

WARNING

Unwarranted use of BY-PASS switch can result in damage to the LRT 110 Crane and cause DEATH or serious injury.

Anti-Two Block BY-PASS Switch allows an operator to override the anti-two block system. This then allows hook or block to be drawn closer to boom point. It is recommended that the BY-PASS switch be used only in cases of extreme emergency. The operator must exercise sound judgment.

32. **Diagnostic Connector Panel** is located in rear of operator's cab to plug in Vehicle Test Module (VTM) to run STE/ICE tests. Fuel shut-off switch is part of STE/ICE system and always remains on unless it is used for STE/ICE tests (Figure 4-13). Panel also has lubrication fitting for turntable bearing. For lubrication instructions, refer to Appendix B.

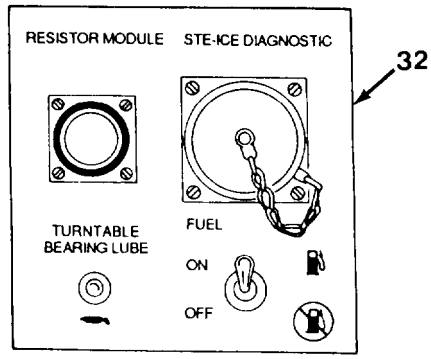

Figure 4-13. *Diagnostic Connector Panel*

33. **Speedometer** indicates travel speed in mph and km/h. An audible warning will sound at 25 mph (40 km/h) (Figure 4-14).

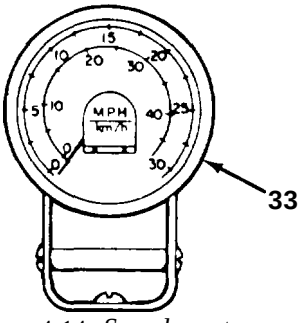

Figure 4-14. *Speedome ter*

34. **Accelerator Pedal** increases fuel flow and engine speed (Figure 4-1).

CAUTION

Do not attempt to move the vehicle with the parking brake engaged. Failure to follow this procedure could cause damage to equipment.

35. **Parking Brake Lever** activates parking brake: push down to engage parking brake; pull up to release. Always engage parking brake before leaving vehicle. Minor adjustments may be made by turning the knob on the end of the parking brake lever clockwise to tighten the brake. When the parking brake is properly adjusted the crane cannot drive through it in third gear.

36. **Brake Pedal** activates hydraulic service brakes.

37. **Heater Switch** turns fan ON or OFF and is located on top of heater behind operator's seat.

38. **Seat Adjust Lever** adjusts seat front to rear and is located under left-hand comer of seat.

39. **Heater Shut-Off Valve** shuts off flow of heated coolant and is located below the left side of heater, behind operator's seat.

40. **Boom Angle Indicator** indicates angle of boom from 0 thru 75 degrees elevation, in 1-degree increments.

41. **Fire Extinguisher** is located on left-hand side of cab on rear wall for emergency fires.

42. **Defroster Fan** is mounted on upper right comer of cab and is controlled by ON-OFF switch on mounting base.

43, **Boom Length Markers are** located on side of boom and are used to indicate boom length.

44. **Capacity Chart is** located in cab on left-hand side and is used to determine proper lift capacity.

45. **Steering Wheel** controls direction of vehicle.

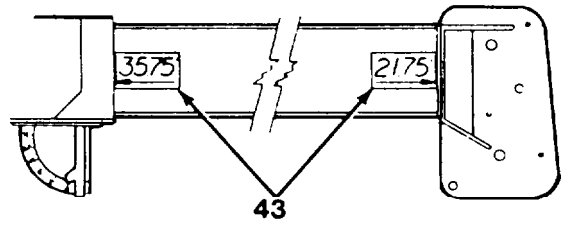

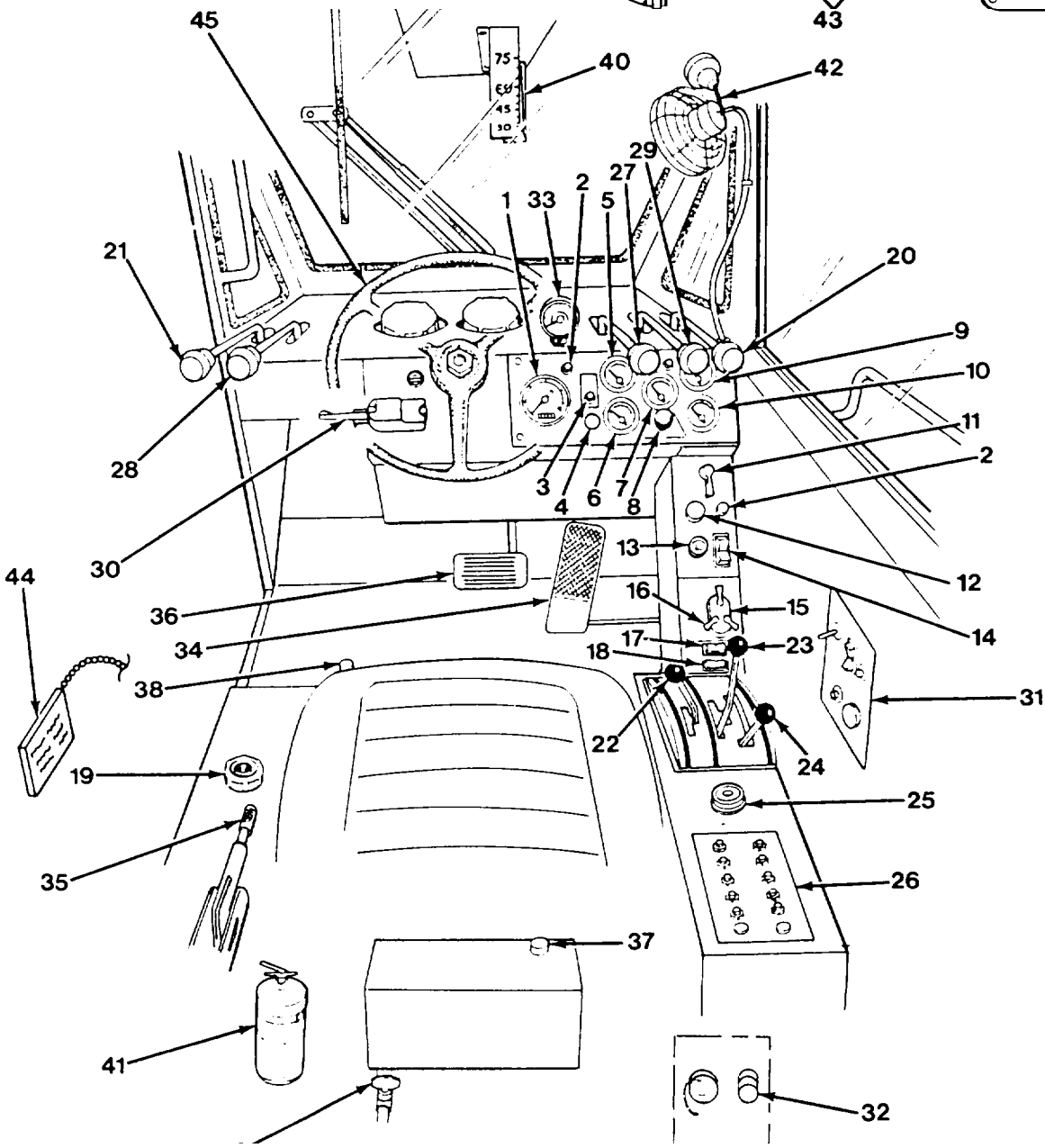

Figure 4-1. *Control and Instrument Identification*

Section II
Initial Adjustments and Control Settings

Checks and Inspections

The following items should be checked each day before start-up and start of operations. Check all fluid levels with vehicle parked on level ground.

WARNING

Cooling system is pressurized. Use extreme caution and proper protection when removing radiator cap after operating temperature is reached. When removing cap, loosen it slowly to the left, then pause a moment. Steam and hot gases will be escaping through the radiator cap; avoid being burned by these gases. Continue to turn cap until it can be removed. Failure to follow this procedure could cause SERIOUS INJURY.

Coolant - Check to be sure level is near top of radiator tank. Check through inspection hole in hood.

General Condition - Inspect vehicle in general for wear, leakage and damage.

Leakage - Make a ground check below the vehicle for signs of leaks.

CAUTION

Never operate engine with oil level below the ADD 1 QT mark or above the FULL mark. Failure to follow this procedure could cause damage to equipment.

Engine Oil - The level should be indicated on the dipstick (Figure 4-15). Oil level should be checked when engine is cold.

Transmission Oil - Check transmission oil level dipstick with engine running and transmission in neutral. Check at a transmission operating temperature of 160 to 190 degreesF(71 to 88 degrees C). Insure that oil is at FULL line indicated on dipstick.

Hydraulic System - Check hoses, tubes, components, reservoir dipstick, valves, pumps, motors, connections, cylinder mounting bushings and pins. The system level, with all cylinders retracted in travel mode, should be at FULL mark on dipstick located on reservoir fill cap.

Lubrication - Perform daily lubrications as shown in lubrication chart (refer to Appendix B).

WARNING

Diesel fuel and other combustible materials are used in the operation and maintenance of this equipment. Do not smoke or allow open flames in areas where combustible materials are stored or used. Failure to follow this procedure could cause DEATH or serious injury.

Fuel/Water Separator - Drain water from fuel/water separator, mounted on outer fuel filter.

Fuel - Check fuel gauge. Engine fuel should be adequate for sustained operations. When adding fuel use ASTM NO. 2 or 2D climatized Diesel Fuel.

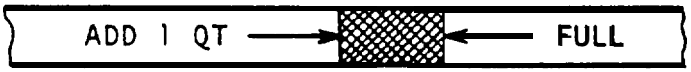

Figure 4-15. *Engine Oil Level*

Air Cleaner - With engine running, check air cleaner restriction indicator located on outside of hood support assembly (yellow is normal; red requires service). Reset indicator each time hood is opened by pushing the button on the bottom of the indicator. If it does not reset, notify maintenance.

Tires - Check for proper pressure before traveling. Tires should only be checked when cold (refer to Recommended Tire Pressure Chart, page 1-20). Check for severe cuts and foreign objects imbedded in tread.

Cable and Blocks - Inspect hoist cable, hoist block, hook latch and boom attachment for readiness.

Boom Head - Inspect cable retention pins and hair pin totters at boom head for correct installation.

CAUTION

Keep tension on cable to prevent damage from slack.

Cable - Reeve hoist cable as required.

Anti-Two Block System - Inspect anti-two block switch found on boom head for damage. Check for free movement of the counterweight attached to switch. Be sure counterweight is secured around correct line of hoisting cable in proper manner. Inspect all electrical connections and wires as well as the entire length of cable attached to the cable reel and its connections for evidence of excessive wear, damage or improper installation. Check cable reel for proper tension and to insure that reel is free to rotate. Verify visual and audible warning devices operation by lifting counterweight.

CAUTION

If disconnects malfunction and hook block is drawn into the boom point, vehicle may be damaged. Care should be taken when performing disconnect test.

NOTE

A warning light will appear on anti-two block panel and an audible signal will be heard if horn switch is in ON position,

The LRT 110 Crane is equipped with disconnects on control linkage. A check of this system should be made prior to lifting. Hoist hook block so that actual contact between block and anti-two block counterweight is made. If all functions are operating properly, winch hoisting will cease and boom will not extend or lower. Should any of these functions continue, disconnects are not working and a complete system check must be made. Boom retract, boom raise and winch down functions remain active and will be unaffected by anti-two block system.

Brake Fluid - Check reservoirs on front of dash. Fill to FULL line on reservoirs.

Safety Equipment - Check safety equipment, including tall lights, parking brake, hazard warning devices and fire extinguisher.

Operator Observations

As the operator, it is your responsibility to observe and report any unusual sounds, odors or other signs of abnormal performance that could indicate trouble ahead. On a routine basis, during the days operations the following items should be checked.

1. Visual inspection - Check complete vehicle for any unusual condition.

2. Check for any leaks or damage to the hydraulic system.

3. Check engine compartment for:

   - Tension and wear of belt.
   - Oil level.
   - Air cleaner restriction indicator.
   - Air intake piping condition.
   - Muffler and exhaust pipe condition.

4. Check dash gauges for proper operation.

5. Check hydraulic reservoir dipstick level.

6. Check crane boom for:

   - Wear or damage to hook block.
   - Wear on cable retention pin at boom head.
   - Proper function of anti-two block system.
   - Proper cable spooling on winch.
   - Wear of cylinder pin connections.

7. Check tires, axles and drive lines for wear or damage.

8. Check cab for:

   - Properly functioning instruments.
   - Properly operating controls.
   - Clean windows.
   - Properly functioning safety equipment.
   - Properly working lights.
   - Cleanliness - free of mud and debris.

Time Intervals - Unusual Conditions

The LRT 110 Crane will require extra service and care when operated under unusual conditions, High or low temperatures, long periods of hard use and continued use in sand, water, mud or snow will break down lubricants. Add or change lubricant more often under these conditions. However, during long periods when the LRT 110 Crane is not in use, the service intervals can be lengthened.

Cable Inspection

All cable in active service should be inspected DAILY along with spooling, sheaves, wedge sockets and any other cable fittings for damage. A thorough cable inspection should be made WEEKLY by a competent inspector.

Refer to Section V, Wire Rope Instructions, page 4-28, for guidelines covering inspection, maintenance, repair and replacement of cable.

WARNING

Incorrect cable type or size will not function properly and may be dangerous when used. Failure to follow this procedure could cause DEATH or serious injury.

Before installing a new or replacement cable, make certain cable is of the correct type and size.

Cable Specifications

The LRT 110 Crane is equipped with 180 ft (54.86 m) of 1/2 in. diameter 6x19 IWRC IPS cable.

Preventive Maintenance Checks and Services (PMC)

The following Preventive Maintenance Checks and Semites (PMCS) should be followed regularly to maintain the LRT 110 Crane at peak operating condition. Perform PMCS more often to compensate for continuous operation or under abnormal conditions (i.e., extreme cold or heat; exposure to moisture or salt; operation in dust or sand).

Daily Check or Every 8 Hours of Service

Check hydraulic reservoir fluid level (refer to lubrication chart, Appendix B, and page 4-10).

Fill fuel tank (refer to page 4-10).

Check engine oil level (refer to page 4-10).

Check coolant level (refer to page 4-10).

Check air cleaner (refer to page 4-11).

Check hydraulic components.

Make overall visual inspection, including ground, for leakage.

Check brake fluid (refer to page 4-11).

Verify that tires are inflated properly (refer to page 1-20).

Check for dirt accumulation in outrigger box.

Drain fuel/water separator (refer to page 4-10).

CAUTION

If any gauge fails to operate, shut engine off and notify maintenance. Failure to follow this procedure could cause damage to equipment.

Check instruments, gauges and safety equipment using the following procedure :

1. Start engine. Check to see if all gauges are operational.
2. Check all lights, warning horns, mirrors and turn signals.
3. Check all controls for proper operation. Controls should move smoothly, without binding or excessive free play.
4. Check transmission oil level (refer to page 4-10).

Check anti-two block system (refer to page 4-11).

Check cable and related equipment (refer to page 4-11).

Lubricate rear axle pivot and axle lockout cylinders. Raise crane on outriggers before greasing (refer to lubrication chart, Appendix B).

Lubricate turntable gear and pinion gear teeth (refer to lubrication chart, Appendix B).

Weekly Check or Every 40 Hours of Service

Perform the Daily Check.

Perform Daily and Weekly lubrication (refer to lubrication chart, Appendix B).

WARNING

- Battery gases can explode. Do not smoke or allow sparks or open flames near batteries. Wear safety glasses or goggles when checking the batteries. Failure to follow this procedure could cause DEATH or serious injury.

- Sulfuric acid contained in batteries can cause serious burns. If battery corrosion or electrolyte makes contact, take immediate action to stop the burning effects:

EYES: Flush with cold water for no less than 15 minutes and seek medical attention immediately.

SKIN: Flush with large amounts of cold water until all acid is removed. Seek medical attention as required.

INTERNAL: If corrosion or electrolyte is ingested, drink large amounts of water or milk. Follow with milk of magnesia, beaten egg or vegetable oil. Seek medical attention immediately.

CLOTHING/EQUIPMENT: Wash area with large amounts of cold water. Neutralize acid with baking soda or household ammonia.

Failure to follow this procedure could cause DEATH or serious injury,

Check battery condition:

1. Check electrolyte level. Fill battery cells to 0.75 in. (19. 1 mm) above the separator plates with distilled water.

2. Check battery box. It should be clean and dry with no signs of leakage from batteries.

3. Check cables. Corroded cables must be cleaned, tightened and coated with grease. Batteries should be clean and free of damage.

Check tire condition (refer to page 4-11).

Visually inspect the LRT 110 Crane. Inspect structural members and welds for cracks, alignment and wear.

Visually inspect hook block. Inspect hook block for damage and wear to sheaves and tubes.

Check hydraulic cylinders and rods. Inspect cylinders for damage and leaks. Inspect rods for nicks, burrs and scratches.

Lubricate control disconnects (refer to lubrication chart, Appendix B).

Lubricate sheaves Type II (refer to lubrication chart, Appendix B).

Two Week Check or Every 80-100 Hours of Service

Perform Daily and Weekly Checks.

Perform Daily, Weekly and Two Week lubrication (refer to lubrication chart, Appendix B).

Verify that wheel nuts have been torqued to 450 to 500 lb-ft (610 to 678 N ● m).

Check engine belt. Visually inspect belt for glazing, cracks and fraying.

Visually check the condition of the hydraulic oil. Thickening of oil or a change in its appearance, such as darkening, may serve as an indicator of when an oil change is needed.

Clean radiator exterior. Wash radiator with soap and water to remove dirt and foreign material from fins of radiator.

Periodic testing of oil is the safest, most accurate method of determining the condition of the oil. An oil sample may be taken through the fitting on inlet end of the reservoir return filter. Obtain hydraulic oil sample for analysis every 100 hours of service.

Operator Troubleshooting

1. Engine Does Not Crank

Problem	Remedy
a. Ignition switch OFF	a. Turn ON
b. Transmission shift not in neutral	b. Shift into neutral
c. Loose battery cables	c. Refer to maintenance
d. Low battery voltage	d. Refer to maintenance

2. Engine Cranks But Does Not Start

Problem	Remedy
a. Out of fuel	a. Check guage and fill tank (refer to page 4-l0)
b. STE/ICE fuel switch OFF	b. Turn ON
c. Temperature below 32 degrees F (O degrees C)	c. Use cold start assist
d. No fuel at engine	d. Check fuel solenoid wire connection. If loose refer to maintenance

3. Electrical Circuit Non-Functional

Problem	Remedy
a. circuit breaker tripped	a. Check and reset
b. Lights will not come on	b. Check for blackout mode and correct
c. Low battery voltage (below 22 V)	c. Increase engine speed and observe voltmeter. If no response, refer to maintenance
d. High battery voltage (above 29.5 V)	d. Refer to maintenance

4. Engine Overheating

Problem	Remedy
a. Low coolant level	a. Cool down and check radiator (refer to page 4-10)
b. Broken fan belt	b. Refer to maintenance
c. Radiator fins plugged	c. Stop engine, check and clean

5. Engine Oil Pressure

Problem	Remedy
a. Low (below 10 psi [69 kPa])	a. Stop engine, check and add oil (refer to page 4-10)
b. High (above 90 psi [621 kpa])	b. Stop and refer to maintenance

6. Transmission Overheating

Problem	Remedy
a. Too high a gear ratio	a. Stop, cool down and change gears
b. Low oil level (oil below FULL line)	b. Check and refer to maintenance
c. High oil level (oil above FULL line)	c. Stop and refer to maintenance

7. Control Lever(s) Inoperative or Erratic

Problem	Remedy
a. Low hydraulic oil level	a. Add hydraulic oil as required (refer to page 4-10)
b. Anti-two block system malfunction	b. Refer to maintenance
c. Lever or linkage damaged	c. Refer to maintenance

8. Boom Hoist or Extend Cylinders Inoperative or Erratic

Problem	Remedy
a. Low hydraulic oil level	a. Add hydraulic oil as required (refer to page 4-10)
b. Load is too heavy	b. Consult Capacity Chart for maximum loads and reduce as required
c. Anti-two block system malfunction	c. Refer to maintenance

Section III
Start-Up

Starting the Engine

WARNING

Exhaust gases can produce symptoms of headache, dizziness and loss of muscular control. DEATH, permanent brain damage or other serious injury may be caused by exhaust gases.

If exhaust gases or exposure symptoms are observed, ventilate the area immediately and treat affected personnel:

- Administer artificial respiration, if required.
- Expose affected personnel to fresh air.
- Keep affected personnel warm.
- Do not permit physical exertion.
- Refer to FM21-11, First Aid For Soldiers for a more detailed description of treatment procedures.

Once the Checks, Inspections and Observations have been completed, the engine maybe started.

1. Make sure parking brake is on.
2. Move transmission shift lever to the neutral position.
3. Set throttle to one-half speed.
4. Turn ignition switch to the ON position.

CAUTION

Do not engage starter motor for more than 30 seconds at a time. Should engine fail to start within 30 seconds, allow starter motor to cool for 2 minutes before attempting to start engine again. Failure to follow this procedure could cause damage to equipment.

5. Push starter button to start engine. Release starter button as soon as engine starts. If engine stalls during start-up procedure, allow engine to stop revolving before re-engaging starter.
6. Move throttle back to idle as soon as engine starts. Idle speed range is 720 to 880 rpm.
7. With engine running, check oil pressure gauge. If gauge does not register minimum readings of 10 psi (69 kpa) idle to 30 psi (207 kPa) governed speed, no load, within 15 seconds, stop engine and refer to maintenance.

Section IV
Operation Under Normal Conditions

Operating the Engine

When engine reaches operating temperature of 140 degrees F (60 degrees C), operations may begin. While engine is running, check gauges at frequent intervals and be alert for any abnormal engine sounds or faulty engine performance.

NOTE

Maintaining battery in a fully charged state is important for starting engine.

When idling engine for extended periods, maintain an idle speed sufficient to prevent battery from being discharged, a voltmeter reading of 26+ V.

Before Moving the LRT 110 Crane

CAUTION

If traveling more than 5 miles on improved roads or 2 miles on rough terrain or unimproved roads, remove anti-two block weight and chain from the switch and secure it to the anchor point of the wedge socket located either on the boom head or hook block, whichever is accessible. Failure to follow this procedure could cause damage to the hook block switch.

The LRT 110 Crane is capable of both off-road and on-road travel. The kind of travel undertaken will determine how carrier is operated. Before moving the LRT 110 Crane around work site or between sites, carefully consider type of terrain, road conditions and any hazards likely to be encountered enroute. Think the move through in advance and carry it out safely.

Pre-Move Check List

Before moving vehicle to and from job sites, complete the following steps:

1. Secure hook block to hook block tieback.
2. Verify that tires are inflated properly (refer to Recommended Tire Pressure Chart, page 1-20).
3. Check to be sure rear wheels are centered, then switch to two-wheel steer.
4. Adjust seat and mirrors for clear vision.

Moving the Vehicle to a Job Site

The general procedure for moving the LRT 110 Crane is as follows:

1. Buckle seat belt.
2. Start engine.
3. Check to be sure engine oil pressure is in normal operating range (30 psi [207 kPa] engine idling to 55 psi [380 kPa] governed no load).
4. Shift into two-wheel drive, 1st gear. This is recommended for normal travel conditions.

CAUTION

Do not attempt to move the vehicle with the parking brake engaged. Failure to follow this procedure could cause damage to equipment.

5. Release parking brake.

6. Shift into forward travel.

Good judgment in selection of gear range and route of travel is essential when operating off-road.

Though designed primarily for use in off-road conditions, there may be instances when highway travel is necessary. In such instances, the LRT 110 Crane is subject to the same regulations governing the operation of other heavy equipment on public roads. Adequate lighting, flares, flags and safety equipment must be on the vehicle at all times.

CAUTION

When operating on hard surfaces, use two-wheel drive only. Failure to do so may result in severe drive line “wind-up” and component failure.

7. Accelerate engine by depressing accelerator pedal until LRT 110 Crane starts to move.

CAUTION

Speed is not to exceed 25 mph (40 km/h). Failure to follow this procedure could cause damage to equipment.

The operator may start to travel from idle in either forward or reverse, and in 1st gear.

In addition to conditions of terrain, gear selection while traveling is also determined by transmission temperature. Normal operating temperature is 160 to 190 degrees F (71 to 88 degrees C).

CAUTION

Traveling with high transmission temperature (above 250 degrees F [121 degrees C]) can cause damage to vehicle. Do not shut engine off when transmission is overheating.

If transmission temperature rises above 250 degrees F (121 degrees C) while traveling, the LRT 110 Crane must be stopped and allowed to cool. Shift to neutral and run engine at 1,000 to 1,200 rpm. The temperature should drop rapidly to 160 to 190 degrees F(71 to 88 degrees C). If temperature does not drop, trouble is indicated, and should be determined before moving again. Overheating generally occurs due to working in too high a gear ratio.

CAUTION

- Never shift between forward and reverse while the LRT 110 Crane is in motion. Failure to follow this procedure could cause damage to equipment.

- Downshifts should not be made when vehicle speed exceeds maximum speed of next lower range. Downshifting at excessive speeds will overspeed drive train components and cause damage to drive shafts.

Full power shifts under load may be made without endangering transmission or drive train components.

CAUTION

Do not operate for extended periods with wide-open throttle at speeds below minimums shown. Failure to follow this procedure could cause damage to equipment.

Upshifting and Downshifting Recommendations

Shift from:

1 to 2 or from 2 to 1 at 2-3 mph (3-5 km/h)
2 to 3 or from 3 to 2 at 3-6 mph (5-10 km/h)
3 to40 or from 4 to 3 at 6-11 mph (10-18 km/h)

Use four-wheel drive only when greater traction is necessary.

Four-wheel drive engagement is accomplished by a mechanical coupling in transmission. It may be necessary to creep to get gears to align.

CAUTION

Under emergency or extreme traveling circumstances, it is possible to stop the LRT 110 Crane with the parking brake. However, this results in rapid brake wear. After stopping 3 or 4 times by this method, parking brake adjustment should be made. Failure to follow this procedure could cause damage to equipment.

Stopping the Engine

Before stopping the engine, perform the following steps:

1. Put transmission in neutral.
2. Engage parking brake.
3. Turn off accessories.
4. Reduce engine speed.
5. Turn ignition switch OFF.

CAUTION

A dirty cab can result in damage to instruments and controls.

6. Keep cab clean.

Lift procedure on Outriggers

WARNING

Never allow boom or load to swing into power lines. If the crane must be operated in the vicinity of power lines, follow these safety precautions:

- Contact the power company and have all power lines and ground wires turned off.
- Never allow any portion of the equipment, including cable, hook block, lines and load, closer to power lines than the distances shown on the Electrical Warning (Danger) Decal.
- Know the maximum height and reach of the crane and erect a suitable barricade around all power sources.

- Warn all personnel in the work area of the power source and electrocution hazard.

- If contact with a power source does occur, DO NOT STEP OFF THE CRANE. Stay on the vehicle until the power is turned off or the equipment is lowered and clear of the power source.

- If fire or other conditions force the operator to leave the crane, jump off and away, keeping all parts of the body clear of the equipment.

Failure to follow these procedures could cause DEATH or serious injury.

WARNING

Keep all parts of body and tools away from moving cable. Failure to follow this procedure could cause DEATH or serious injury.

In making lifts, the operator must successfully coordinate several functions. These include the boom raise/lower, boom extend/retract, load hoist/flower and swing functions. Although experienced operator tends to operate two or more of these functions simultaneously, the lift procedure can be broken down into the following sequence of operations:

WARNING

- The operator must exercise sound judgment in positioning outriggers. The outriggers should not be set near holes, on rocky ground or on extremely soft ground. Setting outriggers in such locations may result in vehicle tipping, causing DEATH or serious injury.

- The LRT 110 Crane must be level prior to extending boom or lifting loads. To achieve this condition, outriggers should be extended to lift carrier wheels off the ground. Use bubble level next to the operator's seat to insure that vehicle is level. The bubble must be centered in circle. Failure to follow this procedure could cause DEATH or serious injury.

1. Set outriggers with boom over front of vehicle, not side. When a firm footing or level ground is not otherwise available, use substantial timbers, solid blocking or other structural members for support. Distribute load so as not to exceed safe bearing capacity of underlying material and to enable leveling of the LRT 110 Crane.

While operating the LRT 110 Crane, frequently check and level the crane. Proper positioning is critically important to both safety and effectiveness of craning operations.

WARNING

- Hook latch is intended to retain loose slings or devices under slack conditions. It is not intended to be an anti-fouling device. Caution should be used to prevent the latch from supporting any of the load. Periodic inspection of latch must be made to insure its proper operating condition. Failure to follow this procedure could cause DEATH or serious injury.

- Make certain slings, ties and hooks are of sufficient capacity, properly set and secure before performing any lift operation. Failure to follow this procedure could cause DEATH or serious injury.

CAUTION

When removing hook block from storage bracket, pay out cable while raising boom to prevent damage to windshield.

Raise boom to a 50-degree elevation, keeping hook block in vertical position. Unhook hook block from storage bracket. Lower boom to horizontal position while raising hook block. Before making a LRT 110 Crane lift, be sure hook is properly engaged with slings. The lifting device should be employed to make lift. Be certain hook latch is not supporting any of the load (refer to the warning decal on the hook block).

WARNING

An operator must be guided by the Capacity Chart mounted on vehicle when considering load weights. Rated loads must never be exceeded. Failure to follow this procedure could cause DEATH or serious injury.

2. Use the Capacity Chart attached to the LRT 110 Crane to interpret conditions and limitations that exist when making a lift. The determining factors are lifted load, radius, boom angle, working position and hoist line reeving.

Use load ratings from the Capacity Chart attached to the LRT 110 Crane when making all lifting calculations.

WARNING

The intent of the following information is to prevent any possibility of either reverse winding of the rope on the winch drum, causing breakage of winch cable, or the unseating of cable from winch drum, resulting in uncontrolled fall of the hook block and load. Failure to follow this procedure could cause DEATH or serious injury.

Always consider, anticipate and/or determine by trial, the maximum amount of cable that will be payed off the winch drum to perform each different craning application of this vehicle. Provide for no less than three wraps of cable remaining on winch drum, as specified in all applicable crane operating safety standards.

The increased possibility of inadequate wraps remaining on winch drum occurs when operating with a higher number of line parts than are required for load being lifted, particularly at longer boom lengths and high boom angles.

Sufficient cable is initially provided to allow the hook block to reach ground level when reeved for the required parts of line indicated on the Capacity Chart for all given loads. Reeving with more parts of line than required may result in all of the cable being payed off the winch drum.

CAUTION

Keep tension on cable to prevent damage from slack.

3. Raise boom to required angle, consulting the boom angle indicator for the boom angle.

The boom elevation is controlled by a hand lever. To LOWER boom, push lever forward. To RAISE boom, pull lever back. Improved control is obtained by operating engine at low speed while "metering" controls. Always operate and release controls slowly to minimize dynamic effects of load. During a lift, where precise control of load is required, do not attempt to use more than one function at a time.

WARNING

- Always use a qualified signalman and observe load while the equipment is in operation.

- When spotting a load, it may become necessary to alter the boom angle or length. If adjustment is necessary, consult the LRT 110 Capacity Chart before performing a lift. Failure to follow this procedure could cause DEATH or serious injury.

CAUTION

Always consider possible obstructions which may be encountered during swings when varying boom height or length. Think swing through, considering all obstacles, before making swing. Failure to follow this procedure could cause damage to equipment.

When lifting with the LRT 110 Crane, a signalman must always be used to direct the operation. Limited visibility to the rear is caused by upperstructure being in the operator's line of vision.

CAUTION

Never hold controls in an "activated' position once hoist/lower cylinder or extend/retract cylinder has reached its limit of travel. This can cause overheating of hydraulic oil.

4. Swing boom over load. Upperstructure and boom swing is controlled by swing lever. To swing boom to the RIGHT, push lever forward. To swing boom to LEFT, pull lever back. Swing speed increases as lever is moved further forward or back. Swing speed also varies with engine speed.

⚠ WARNING

Never lift and swing a load directly over operator's compartment or over ground personnel in the work area. Failure to follow this procedure could cause DEATH or serious injury.

CAUTION

ALWAYS START AND STOP SWINGS GRADUALLY. Stopping swing too abruptly will cause load to oscillate and impose side loads on boom. This will cause damage to boom.

When ready, try for a smooth, controlled, safe swing. The swing should be SLOW. Start SLOWLY and allow load to buildup just enough momentum to carry it through to the point where it is to be lowered. Begin slowing swing in advance of point where load is to be lowered. Slow swing GRADUALLY, enabling it to "coast" to a stop over desired spot.

If properly executed, load will hang motionless when swing is terminated. If load is oscillating, swing was made too rapidly and/or stopped too abruptly.

5. Extend boom to desired length (refer to the Capacity Chart). EXTEND boom by pushing extend/retract lever forward and RETRACT by pulling lever back.

CAUTION

Never pull to the side with a crane boom. Crane booms are not designed for excessive side pull and may collapse if subjected to excessive side loading.

6. Lower hook block to load and fasten hook. Make sure hook is properly engaged in slings or lifting device employed to make the lift. Be certain hook latch is not supporting any of the load (refer to warning decal on hook block).

Hoisting or lowering load with winch is controlled by winch lever. To LOWER load, push lever forward. To RAISE load, pull lever back. Improved control is obtained by operating engine at low speed while "metering" control.. Always actuate and release this lever slowly to minimize dynamic effects on load and to prevent "bird caging" of cable on winch drum.

⚠ WARNING

- Never operate equipment with personnel on the hook or a load. Failure to follow this procedure could cause DEATH or serious injury.

- Crane operators must always be prepared to take emergency action while a load is suspended in the air. Never leave the operator's compartment with a load suspended. Failure to follow this procedure could cause DEATH or serious injury.

7. Lift load to desired height. Do not lift higher than necessary.

The LRT 110 Crane is equipped with an anti-two block system. If hook or block is raised too close to boom head, a warning light appears on panel. If horn switch is activated, an audible warning will sound. This vehicle is also equipped with control disconnects to prevent winch from raising load and boom from extending or lower-

ing. To reactivate the system disconnects, retract or raise boom and/or lower hook.

CAUTION

Do not continue to pull block up after contact has been made with boom head. This will result in damage to boom head and sheaves. The cable may also be broken, causing load to drop.

If the operator needs to raise hook block beyond point at which the anti-two block is activated, he may override the system by using anti-two block BY-PASS switch (refer to page 4-7).

CAUTION

When spotting load, it may be necessary to alter boom length or boom angle. In making these adjustments, the operator must guard against exceeding rated load as determined by the Capacity Chart. Failure to follow this procedure could cause damage to equipment.

8. Swing and spot load over the location where it is to be placed. When lowering light loads, be sure to maintain sufficient cable tension, preventing cable from becoming loose on cable drum. Loose cable can slip and bind suddenly, causing "jerky" lowering and shock loading of boom. Loose wraps may form loops which can be overlaid when cable is wound onto winch drum. These conditions may result in personal injury or property damage.

9. Lower load and unfasten hook.

CAUTION

When attaching hook block to hook block tieback, take up cable slowly while lowering boom to prevent damage to windshield.

10. Center boom over cab and raise boom to a 50-degree angle. Lower hook block down far enough to hook it into hook block tieback on front of the LRT 110 Crane. Lower boom to travel position while taking up slack in cable.

Lift Procedure "On Tires"

CAUTION

- Insufficient tire pressure reduces the "On Tires" capacity. Attempts to pick rated capacity without properly inflated tires may cause vehicle to tip and/or result in damage to tires and rims.

- The following precautions are necessary to prevent a "pendulum" effect of a swinging load. Failure to follow these precautions can result in vehicle tipping over.

Listed below are special precautions for "On Tires" lifts. Load Ratings shown in the "On Tires" portion of the Capacity Chart are based on the following conditions:

1. Boom shall be carried straight over front of vehicle.

2. Travel speed shall be reduced to suit conditions.

3. Specified tire pressure shall be maintained.

4. Sudden starts and stops shall be avoided.

5. Tag or restraint lines shall be provided to snub swinging of load.

CAUTION

Traveling over uneven terrain with rear axle oscillation locked out can result in instability. Excessive boom length can also cause instability depending on terrain and wind pressure.

6. Load shall be carried as near to ground as possible with necessary minimum boom length. Carry straight over front since rear axle oscillation is locked out when boom moves off center more than 5 degrees.

Hand Signals for the LRT 110 Crane Operation

The following are hand signals and their meaning for the operation of the LRT 110 Crane. Both operator and person indicating the necessary movement of the LRT 110 Crane must be familiar with all hand signals and their interpretation (Figure 4-16).

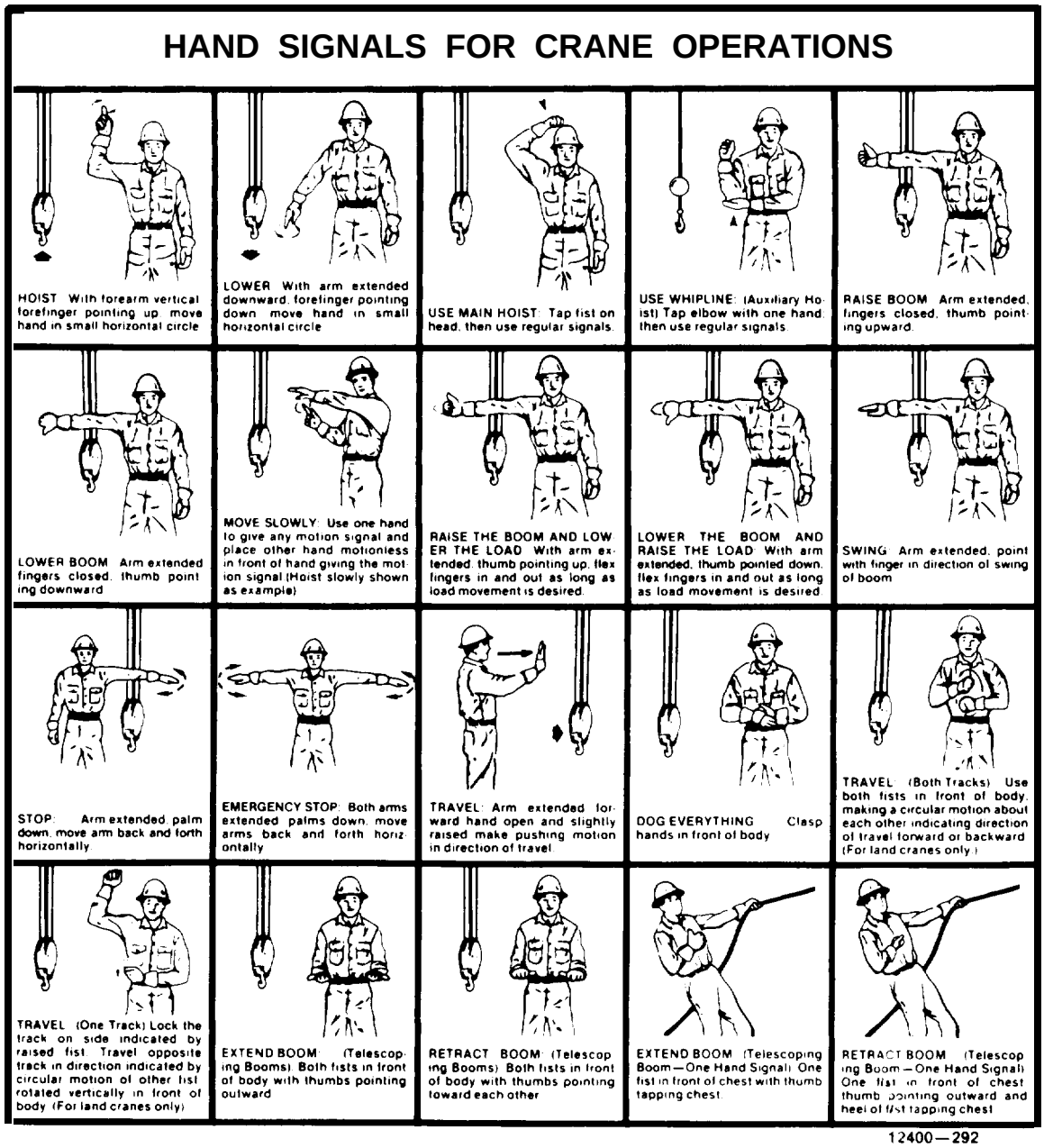

Figure 4-16. *Hand Signals for Crane Operation*

Section V
Wire Rope Instructions

Rope Identification and Construction

Wire rope is identified not only by its component parts, but also by its construction, i.e., by the way the wires have been laid to form strands, and by the way the strands have been laid around the core.

The following illustration is a comparison of typical wire rope lays (Figure 4-17):

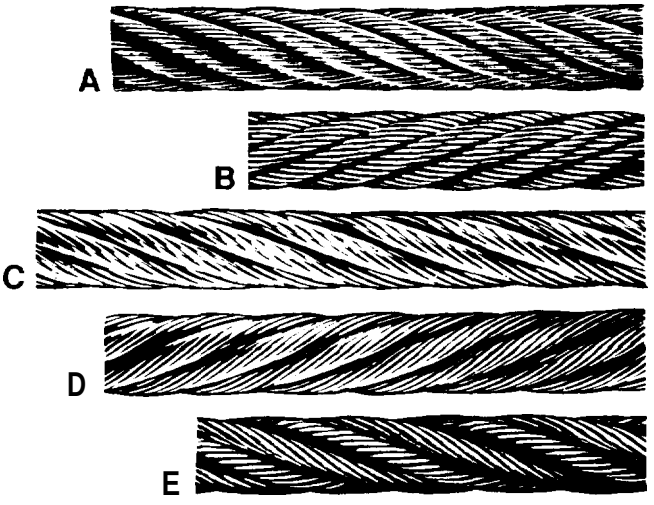

Figure 4-17.
a.Right Regular Lay b. Left Regular Lay c. Right Lang Lay d. Left Lang Lay e. Right Alternate Lay.

In Figure 4-17, illustrations (A) and (C) show strands as normally laid into the rope to the right, in a fashion similar to the threading in a right-hand bolt, Conversely, the "left lay" rope strands illustrations (B) and (D) are laid in the opposite direction.

Again in Figure 4-17, the first two illustrations (A) and (B) show regular lay ropes. Following these are the types known as lang lay ropes. Note that the wires in regular lay ropes appear to line up with the axis of the rope; in lang lay rope the wires form an angle with the axis of the rope.

This difference in appearance is a result of variations in manufacturing techniques: regular lay ropes are made so that the direction of the wire lay in the strand is opposite to the direction of the strand lay in the rope; lang lay ropes (C) and (D) are made with both strand lay and rope lay in the same direction. Finally, the last rope illustrated (E), called alternate lay, consists of alternating regular and lang lay strands.

Wire rope nomenclature also defines: length, size (i.e., diameter), type, direction of lay, grade of rope, type of core and whether it is preformed (p/f) or non-preformed (rip/f). If the direction and type of lay are omitted from the rope description, it is presumed to be a right regular lay. In addition, if no mention is made as to preforming, this will be presumed as a requirement for preforming. On the other hand, an order for elevator rope requires an explicit statement since p/f and rip/f ropes are used extensively.

An example of a complete description would appear thus:

600 ft 3/4 in. 6x25 FW Left lang lay
Improved plow IWRC.

(Rope described above would be made PRE-FORMED.)

There are four basic constructions around which standard wire ropes are built (Figure 4-18):

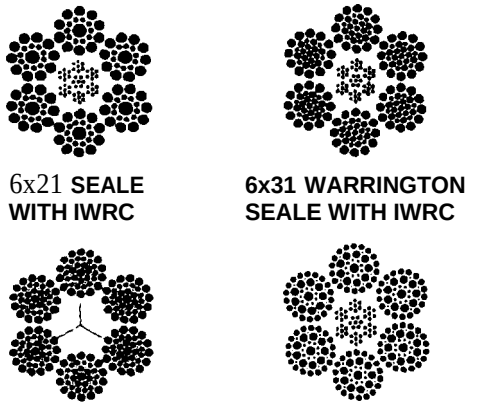

Figure 4-18. *Basic Design Construction*

Illustrated below are a few combinations of basic design constructions (Figure 4- 19). Wire rope is identified by reference to its number of strands, as well as the number and geometric arrangement of wires in the strand (Figure 4-20).

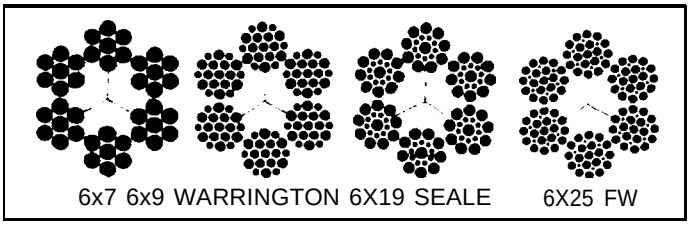

Figure 4-19. *Basic Constructions*

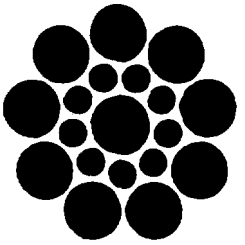

Figure 4-20. *A Single Wire Rope Strand*

Table 1. Wire Rope Classification

Based on the normal number of wires in each strand

Classification	Description
6x7	Containing 6 strands that are made up of 3 through 14 wires, of which no more than 9 are outside wires.
6x19	Containing 6 strands that are made up of 15 through 26 wires, of which no more than 12 are outside wires.
6x37	Containing 6 strands that are made up of 27 through 49 wires, of which no more than 18 are outside wires.
6X61	Containing 6 strands that are made up of 50 through 74 wires, of which no more than 24 are outside wires.
6x91	Containing 6 strands that are made up of 75 through 109 wires, of which no more than 30 are outside wires.
6x127	Containing 6 strands that are made up of 110 or more wires, of which no more than 36 are outside wires.
8x19	Containing 8 strands that are made up of 15 through 26 wires, of which no more than 12 are outside wires.
19x7 and 18x7	Containing 19 strands, each strand is made up of 7 wires. It is manufactured by covering an inner rope of 7x7 left lang lay construction with 12 strands in right regular lay. (The rotation-resistant property that characterizes this highly specialized construction is a result of the counter torques developed by the two layers.) When the steel wire core strand is replaced by a fiber core, the description becomes 18x7.

When a center wire is replaced by a strand, it is considered as a single wire, and the rope classification remains unchanged. There are, of course, many other types of wire rope, but they are useful only in a limited number of applications and, as such, are sold as specialties. They are usually designated according to their actual construction.

Wire Rope Installation

Checking The Diameter

It is most important to check the diameter of the delivered rope before installation. This is to make certain that the rope diameter meets the specified requirements for the given machine or equipment. With an undersize diameter rope, stresses will be higher than designed for and the probability of breaking the rope will be increased; an oversize diameter rope will wear out prematurely. This happens because of abuse to the rope caused by pinching in the grooves of the sheave and drum. In checking, however, the "true" rope diameter must be measured. And this is defined as the diameter of the circumscribing circle, i.e., its largest cross-sectional dimension. To insure accuracy, this measurement should be made with a wire rope caliper using the correct method (B, Figure 4-21). For measuring ropes with an odd number of outer strands, special techniques must be employed.

Design specifications for wire rope are such that the diameter is slightly larger than the nominal size, according to the allowable tolerances shown in Table 2.

Table 2. Oversize Limits of Wire Rope Diameters*

Nominal Rope Diameter	Allowable Limits
Over 1/4 in. and larger (6.35 mm and larger)	-0 +5%

*These limits have been adopted by the Wire Rope Technical Board (WRTB), and are being considered for inclusion in the forthcoming revised edition of "Federal Standard RR-W-410." In the case of certain special purpose ropes, such as aircraft cables and elevator ropes, each has specific requirements.

In measuring a wire rope correctly, always measure the larger dimension. The "true" diameter (A) lies within the circumscribed circle (B). Avoid using incorrect measurement position (C, Figure 4-21).

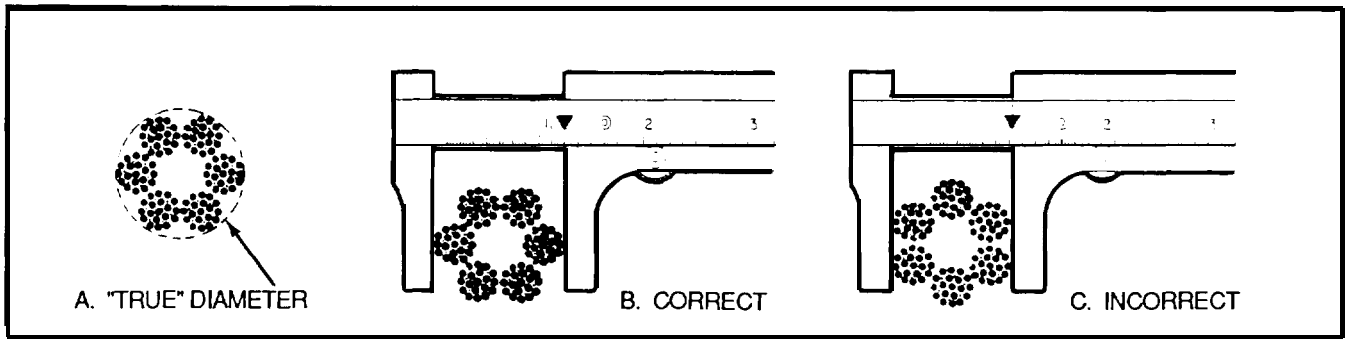

Figure 4-21. *How to Measure (or caliper) a Wire Rope*

Unreeling and Uncoiling

Wire rope is shipped in cut lengths, either in coils or on reels. Great care should be taken when the rope is removed from the shipping package since it can be permanently damaged by improper unreeling or uncoiling. Looping the rope over the head of the reel or pulling the rope off a coil while it is lying on the ground, will create loops in the line. Pulling on a loop will, at the very least, produce imbalance in the rope and may result in open or closed kinks (Figure 4-22). Once a rope is kinked, the damage is permanent. To correct this condition, the kink must be cut out, and the shortened pieces used for some other purpose.

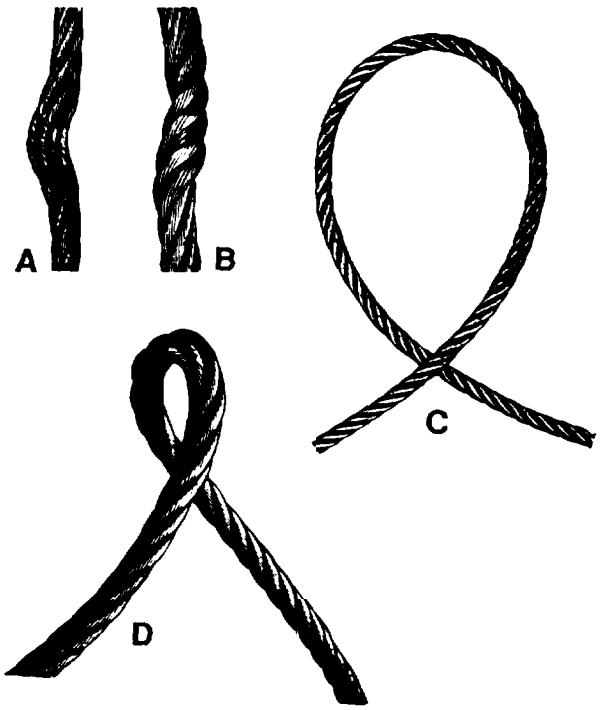

Figure 4-22. *Wire Rope Kinking*

Improper handling will help create open (A) or closed (B) kinks. The open kink will open the rope lay; the closed kink will close it. Do not allow the rope to form a small loop. If, however, a loop forms and is removed at the point shown (C), a kink will be avoided. When the looped rope is put under tension (D), a kink will form. The rope is then permanently damaged and is of little value.

Unwinding wire rope from its reel also requires careful and proper procedure. There are three methods to perform this procedure correctly:

1. Method A: The reel is mounted on a shaft supported by two jacks or a roller payoff (Figure 4-23). Since the reel is free to rotate, the rope is pulled from the reel by a workman, holding the rope end and walking away from the reel as it unwinds. A braking device should be employed so that the rope is kept taut and the reel is restrained from over-running the rope. This is necessary particularly with powered de-reeling equipment.

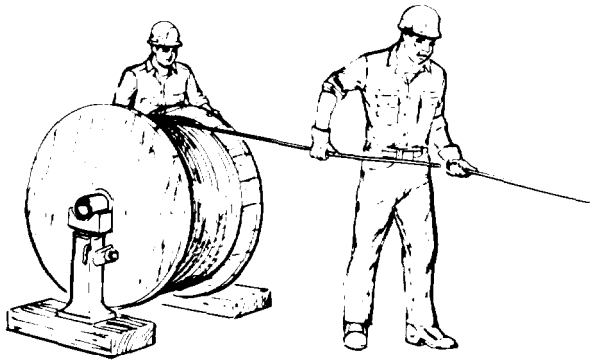

Figure 4-23. *Mounted Unreeling*

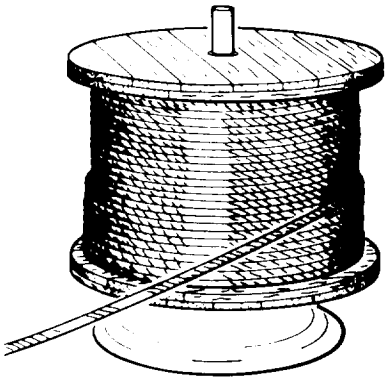

Figure 4-24. On *Vertical Unreeling& Stand*

2. Method B: Mount the reel on an unreeling stand (Figure 4-24). It is then unwound in the same manner as described in Method A. In this case, however, greater care must be exercised to keep the rope under tension sufficient to prevent the accumulation of slack - a condition that will cause the rope to drop below the lower reel head.

3. Method C: Hold the end of the rope while the reel itself is rolled along the ground. With this procedure the rope will pay off properly; however, the end being held will travel in the direction the reel is being rolled. As the difference between the diameter of the reel head and the diameter of the wound rope increases, the speed of travel will increase.

When re-reeling wire rope from a horizontally supported reel to a drum, it is preferable for the rope to travel from the top of the reel to the top of the drum (Figure 4-25). Re-reeling in this manner will avoid putting a reverse bend in the rope as it is being installed. If a rope is installed inducing a reverse bend, it may cause the rope to become livelier and, consequently, harder to handle.

When unwinding wire rope from a coil, there are two suggested methods for carrying out this procedure in a proper manner:

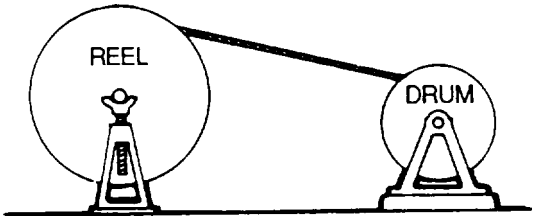

Figure 4-25. *Horizontal Re-reeling*

1. Method A: Place the coil on a vertical unreeling stand. The stand consists of a base with a fixed vertical shaft. On this shaft there is a "swift," consisting of a plate with inclined pins positioned so that the coil may be placed over them. The whole swift and coil then rotate as the rope is pulled off. This method is particularly effective when the rope is to be wound on a drum.

2. Method B (the most common as well as the easiest uncoiling method): Hold one end of the rope while rolling the coil along the ground like a hoop (Figure 4-26).

Incorrect methods of unreeling and uncoiling wire rope will most likely result in kinks (Figures 4-27 and 4-28). Such improper procedures should be strenuously avoided in order to prevent the occurrence of loops. These loops, when pulled taut, will inevitably result in kinks. No matter how a kink develops, it will damage strands and wires, and the kinked section must be cut out. Proper and careful handling will keep the wire rope free from kinks.

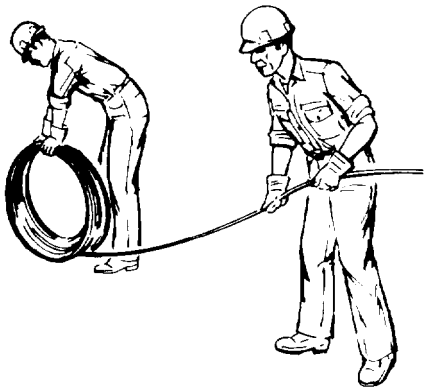

Figure 4-26. Correct Method of Uncoiling Wire Rope

Figure 4-27. Incorrect Method of Unreeling Wire Rope

Figure 4-28. Incorrect Method of Uncoiling Wire Rope

Seizing Wire Rope

While there are numerous ways to cut wire rope, in every case certain precautions must be observed. Proper seizings are always applied on both sides of the place where the cut is to be made, In a wire rope, carelessly or inadequately seized, ends may become distorted and flattened, and the strands may loosen. Subsequently, when the rope is put to work, there may be an uneven distribution of loads to the strands. This condition will significantly shorten the life of the rope.

There are two widely accepted methods of applying seizing.

1. Method A: Lay one end of the seizing wire in the groove between two strands; wrap the other end tightly in a close helix over a position of the groove using a seizing iron (a round bar 1/2 to 5/8 in. diameter by 18 in. long) (Figure 4-29). Both ends of the seizing wire should be twisted together tightly, and with a finished appearance. Seizing widths should not be less than the rope diameter.

2. Method B: The second of two accepted methods for placing seizing on wire rope is illustrated in Figure 4-30. The seizing itself should be a soft or annealed wire or strand. The seizing wire diameter and the length of the seize will depend on the diameter of the wire rope. But the length of the seizing should never be less than the diameter of the rope being seized. For preformed ropes, one seizing on each side of the cut is normally sufficient. But for those that are not preformed, a minimum of two seizings is recommended (Figure 4-3 1). Seizings should be spaced six rope diameters apart.

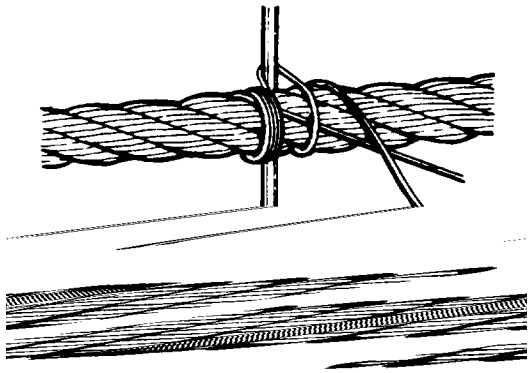

Figure 4-29. *Seizing Wire Rope - Method A*

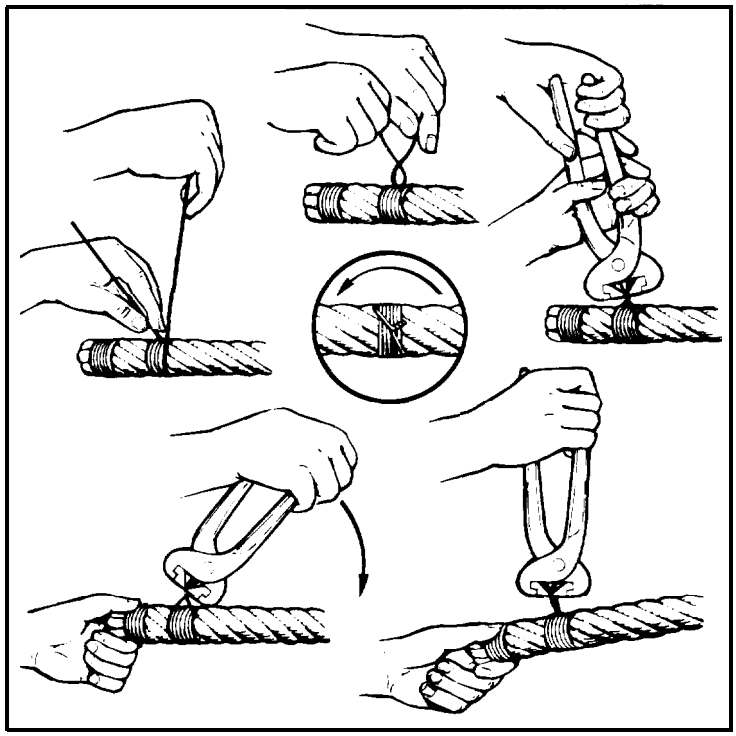

Figure 4-30. Seizing Wire Rope - Method A

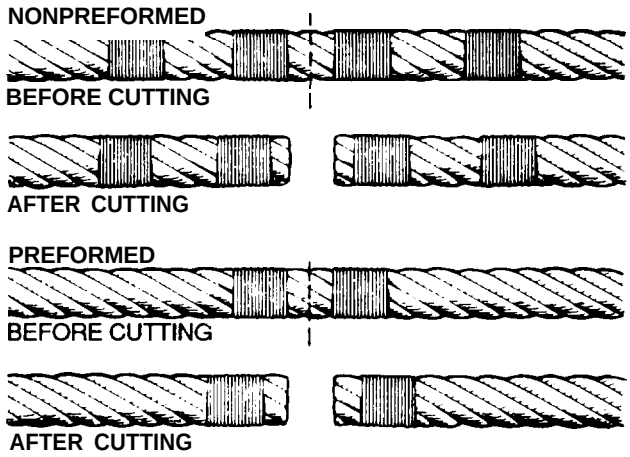

Figure 4-31. SeizinG *Applied Before Cutting*

Table 3 lists seizing lengths and seizing wire diameters suggested for use with some commonly used wire ropes.

Table 3. Seizing: Suggested Diameters and Lengths

Rope Diameters		Seizing Wire Diameters		Seizing Lengths	
in.	mm	in.	mm	in.	mm
3/8-9/1 6	9.5-14.3	0.048	1.2	0.5	13

Cutting Wire Rope

WARNING

Using an axe or hatchet to cut wire rope may be dangerous. If necessary to use, proceed with great caution. Failure to follow this procedure could cause SERIOUS INJURY. Portable hydraulic and mechanical rope cutters are available. In remote areas, however, it may at times be necessary to use less desirable cutting methods.

Wire rope is cut after being properly seized (Figure 4-3 1). Cutting is a reasonably simple operation provided appropriate tools are used. There are several types of cutters and shears commercially available. These are specifically designed to cut wire rope.

End Fittings and/or Attachments

There are many available designs of end fittings and attachments, some of which were developed for particular applications. The most common ones are illustrated in Figure 4-32.

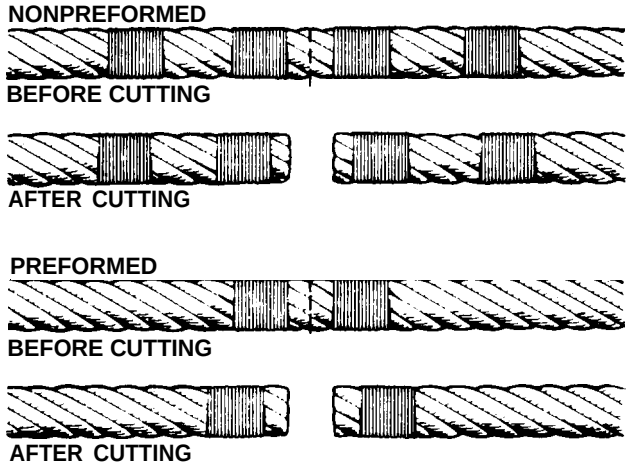

Figure 4-31. *Seizing Applied Before Cutting*

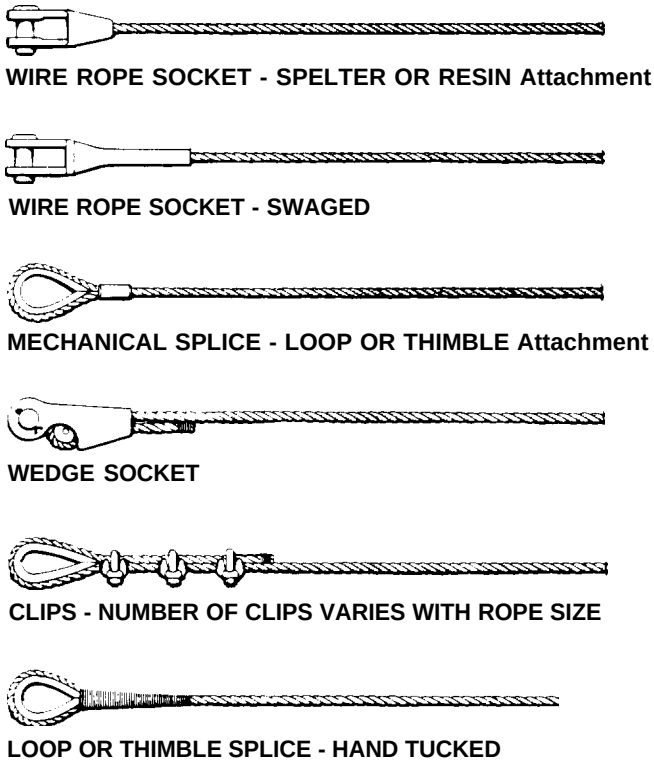

Figure 4-32. *End Fittings and Attachments*

Table 4. Terminal Efficiencies (Approximate)

Efficiencies are based on nominal strengths

Method of attachment	Efficiency Rope with IWRC*	Rope with FC**
Wire Rope Socket-Spelter or Resin Attachment	100%	100%
Swagged Socket	95%	(Not Established)
Mechanical Spliced Sleeve 1 in. (25.40 mm) Diameter and Smaller	95%	92.5%
Loop or Thimble Splice Hand Spliced (Tucked) (Carbon Steel Rope) 1/2 in. (12.70 mm)	86%	86%
Loop or Thimble Splice Hand Spliced (Tucked) (Stainless Steel Rope) 1/2 in(12.70 mm)	76%	
Wedge Sockets*** (Depending on Design)	75 to 95%	75 to 95%
Clips*** (Number of Clips Varies with size of Rope)	80%	80%

*IWRC. - Independent Wire Rope Core

**FC - Fiber Core

***Typical values when applied properly. Refer to fittings manufacturers for exact values and method.

Socketing

WARNING

Improperly attached wire rope terminals lead to serious or possibly unsafe conditions. Failure to follow this procedure could cause DEATH or serious injury.

All wire rope elements must be held securely by the terminal. If this is not accomplished, the strands will “loaf on the job” and there is every likelihood that a strand will become “high” (Figure 4-33). Selective abrasive wear of the loose strand will necessitate early removal of the rope.

Figure 4-33. *A "High" Strand*

WARNING

To avoid many dangerous practices, play it safe by following correct procedures. Failure to follow these procedures could cause loads to fall causing DEATH or serious injury.

When preparing a wire rope for socketing, it is of extreme importance to follow recommended procedures (refer to page 4-40). Procedures other than those stipulated here may develop the required strength but this cannot be predetermined without destructive tests. It is far safer and ultimately less costly to follow well-established practices.

There are many ways to go wrong in socketing procedures. Some of the more common PITFALLS THAT SHOULD BE GUARDED AGAINST include:

1. Turning back the strands, inward or outward, before the "broom" is inserted into the socket.

2. Turning back the strands and seizing them to the body of the rope.

3. Turning back the strands and tucking them into the body of the rope.

4. Tying a knot in the rope.

5. Driving nails, spikes, bolts and similar objects into the socket after the rope is in, so as to "jam" it tight; this is particularly dangerous and ruinous.

Wire Rope Clips

Wire rope clips are widely used for attaching wire rope to haulages, mine cars and hoists, and for joining two ropes,

Clips are available in two basic designs: the U-bolt and fist grip (Figure 4-34). The efficiency of both types is the same.

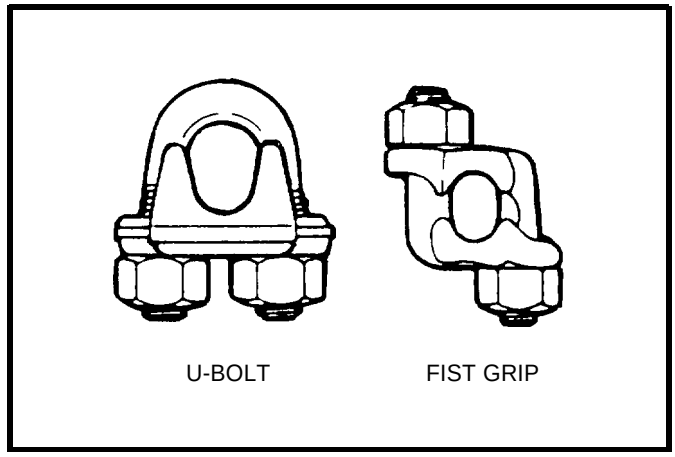

Figure 4-34. *Basic Designs of Wire Rope Clips*

U-Bolt Clips

Refer to Table 5 and Figure 4-35 for specifications of U-bolt clips.

The recommended method of applying U-bolt clips to get maximum holding power of the clip is as follows:

WARNING

- When using U-bolt clips, extreme care must be exercised to make certain that they are attached correctly. Failure to follow this procedure could cause DEATH or serious injury.

- Failure to make a termination in accordance with the following instructions, or failure to periodically check and retighten to the recommended torque, will cause a reduction in efficiency rating which could cause DEATH or serious injury.

1. Turn back the specified amount of rope from the thimble. Apply the first clip one base width from the dead end of the wire rope (U-bolt over dead end; live end rests in clip saddle). The U-bolt must be applied so that the "U" section is in contact with the dead end of the rope (Figure 4-36). Tighten nuts evenly to recommended torque.
2. Apply the next clip as near the loop as possible. Turn nuts firmly, but do not tighten.
3. Space additional clips, if required, equally between the first two. Turn nuts, take up rope slack and tighten all nuts evenly on all clips to recommended torque.

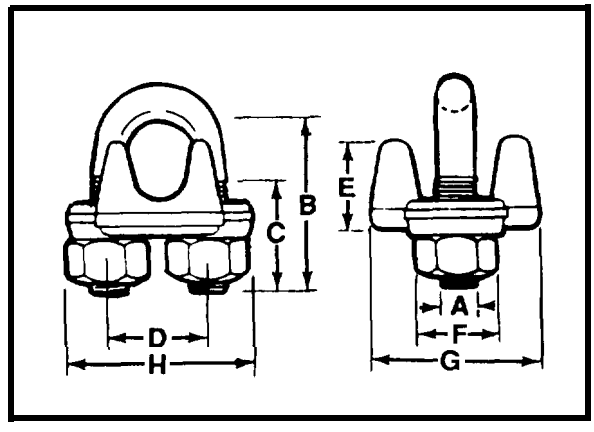

Figure 4-35. *Attaching U-bolts*

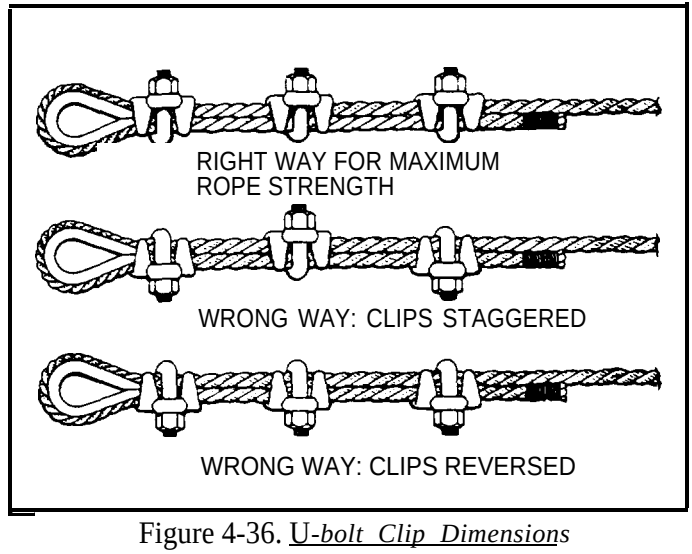

Figure 4-36. *U-bolt Clip Dimensions*

Table 5.* U-Bolt Clip Specifications

Clip Size	A	B	c	D	E	F	G	H	Min. no. of clips	Amount of rope to turn back	Torque	Weight
1/2 in,	0,50 in.	1.88 in.	1.00 in.	1.19 in.	1.13 in.	0.88 in.	1.91 in.	2.28 in.	3	11.5 in.	65 lb-ft	75 lb/100
	12,7 mm	47,8 mm	25,4 mm	30,2 mm	28.7 mm	22,4 mm	48,5 mm	57.9 mm		292 mm	88 N•m	34 kg/100

*From the Crosby Group

NOTE

Rope will stretch and shrink in diameter when loads are applied,

4. Apply the initial load and retighten nuts to the recommended torque. Inspect periodically and retighten.

A termination made in accordance with the above instructions, and using the number of clips shown, has an approximate 80% efficiency rating. This rating is based upon the catalog breaking strength of wire rope. If a pulley is used in place of a thimble for turning back the rope, add one additional clip.

NOTE

The following information is based upon the use of U-bolt clips on new rope.

The number of clips shown is based upon using right regular or lang lay wire rope, 6x19 class or 6x37 class, fibre core or IWRC, IPS or XIPS. If Scale construction or similar large outer wire type construction in the 6x19 class is to be used for sizes 1 in. and larger, add one additional clip.

The number of clips shown also applies to right regular lay wire rope, 8x19 class, fibre core, IPS size 1-1/2 in. and smaller; and right regular lay wire rope, 18x7 class, fibre core, IPS or XIPS, sizes 1-3/4 and smaller.

For other classes of wire rope not mentioned above, it may be necessary to add additional clips to the number shown.

If a greater number of clips are used than shown in the table, the amount of rope turnback should be increased proportionately.

Fist Grip Clips

WARNING

Failure to make a termination in accordance with the following instructions, or failure to periodi - tally check and retighten to the recommended torque, will cause a reduction in efficiency rating, which could cause DEATH or serious injury.

Refer to Figure 4-37 and Table 6 (page 4-40) for specifications of fist grip clips.

The recommended method of applying fist grip clips is as follows:

1. Turn back the specified amount of rope from the thimble. Apply the first clip one base width from the dead end of the wire rope. Tighten nuts evenly to recommended torque.

2. Apply the next clip as near the loop as possible. Turn nuts firmly but do not tighten.

3. Space additional clips, if required, equally between the first two. Turn nuts, take up rope slack, and tighten all nuts evenly on all clips to recommended torque.

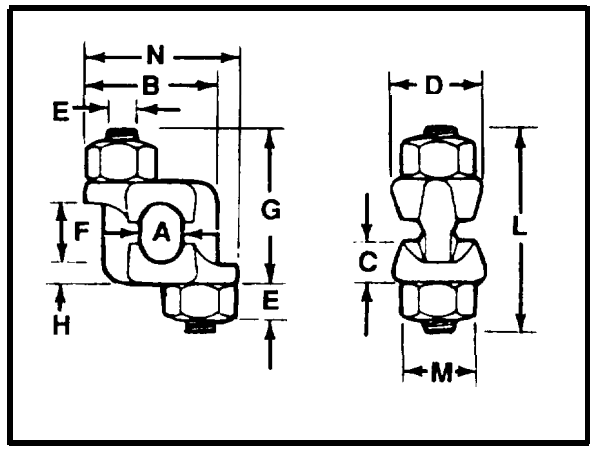

Figure 4-37. *Fist Grip Clip Dimensions*

Table 6.* Fist Grip Clip Specifications

Clip Size	A	B	C	D	E	F	G	H	L approx	M	N	Min. no. clips	Amount of rope to Torque turn back	Weight
1/2 in.	0.50 in. 12.7 mm	1.88 in. 47.8 mm	0.56 in. 14.2 mm	1.25 in. 31.8 mm	0.50 in. 12.7 mm	1.00 in. 25.4 mm	2.19 in, 55,6 mm	0.28 in. 71. mm	2,75 in, 69.9 mm	0.88 in. 22.4 mm	2.19 in. 55.6 mm	3	11 in. 279 mm	65 lb-ft 88 N •m
														60 lb/100 27 kg/100

*From the Crosby Group

NOTE

Rope will stretch and shrink in diameter when loads are applied.

4. Apply the initial load and retighten nuts to the recommended torque. Inspect periodically and retighten.

A termination made in accordance with the above instructions, and using the number of clips shown, has an approximate 80$% efficiency rating. This rating is based upon the catalog breaking strength of wire rope. If a pulley is used in place of a thimble for turning back the rope, add one additional clip.

The number of clips shown is based upon using right regular or lang lay wire rope, 6x19 class or 6x37 class, fibre core or IWRC, IPS or EIPS. If Scale construction or similar large outer wire type construction in the 6x19 class is to be used for sizes 1 in. and larger, add one additional clip.

NOTE

The following information is based upon the use of fist grip clips on new rope.

The number of clips shown also applies to right regular lay wire rope, 8x19 class, fibre core, IPS, sizes 1-1/2 in. and smaller; and right regular lay wire rope, 18x7 class, fibre core, IPS or EIPS, sizes 1-1/2 and smaller.

For other classes of wire rope not mentioned above, it may be necessary to add additional clips to the number shown.

If a greater number of clips are used than shown in the table, the amount of rope turnback should be increased proportionately.

Wedge Sockets

One of the more popular end attachments for wire rope is the wedge socket. For field or on-the-job attachment, it is easily installed and quickly dismantled.

WARNING

Failure to install wedge sockets in accordance with the following instructions could cause DEATH or serious injury.

The recommended method for the installation of wedge sockets is as follows:

1. Inspect the wedge and socket. All rough edges or burrs that might damage the rope should be removed.

2. If the end of the rope is welded, the welded end should be cut off. This will allow the distortions of the rope strands, caused by the sharp bend around the wedge, to adjust themselves at the end of the line. If the weld is not cut off, the distortions will be forced up the working line. This may result in the development of high strands and wavy rope.

3. Place the socket in an upright position and bring the rope around in a large, easy-to-handle loop. Care must be taken to make certain that the live-loaded-side of the rope is in line with the ears (Figure 4-38).

WARNING

Clamp the dead end close to the socket to prevent the rope and wedge from disengaging from the socket. Failure to follow this procedure could cause DEATH or serious injury.

4. Clamp the dead end of the rope (Figure 4-39) (refer to page 2-3).

5. Secure the ears of the socket to a sturdy support and carefully take a strain on the live side of the rope. Pull the wedge and rope into position with tension sufficiently tight to hold them in place.

6. After final pin connections are made, increase the loads gradually until the wedge is properly seated. Avoid sudden shock loads.

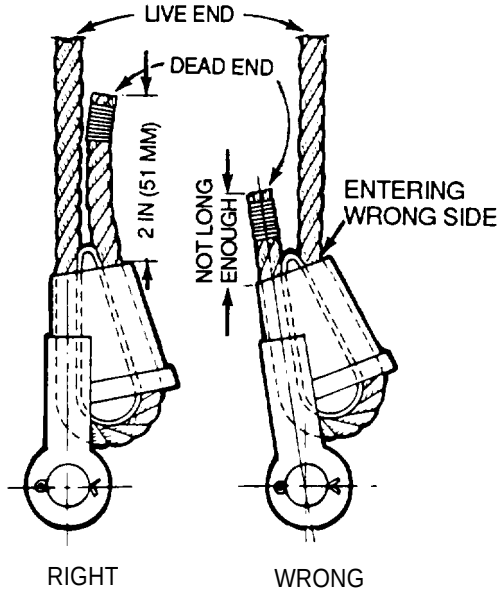

Figure 4-38. *Installing the Wedge Sock et*

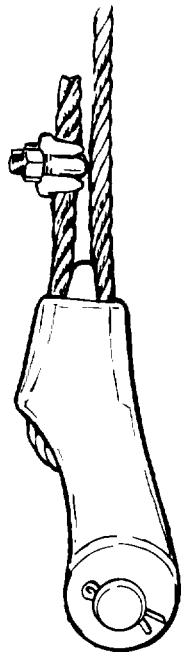

Figure 4-39. *Clamping the Dead End of the Wire Rope*

Drums. Plain (Smooth)

Installation of a wire rope on a plain (smooth) face drum requires a great deal of care. The starting position should be at the drum end so that each turn of the rope will wind tightly against the preceding turn (Figure 4-40). Close supervision should be maintained all during installation. This will insure the following:

1. The rope will be properly attached to the drum.

2. Appropriate tension will be maintained on the rope as it is wound on the drum.

3. Each turn will be guided as close to the preceding turn as possible, so that there are no gaps between turns.

4. There will beat least two dead turns on the drum when the rope is fully unwound during normal operating cycles.

By holding the right or left hand with index finger extended, palm up or palm down, the proper procedure for installing left and right lay rope on a smooth drum can be easily determined.

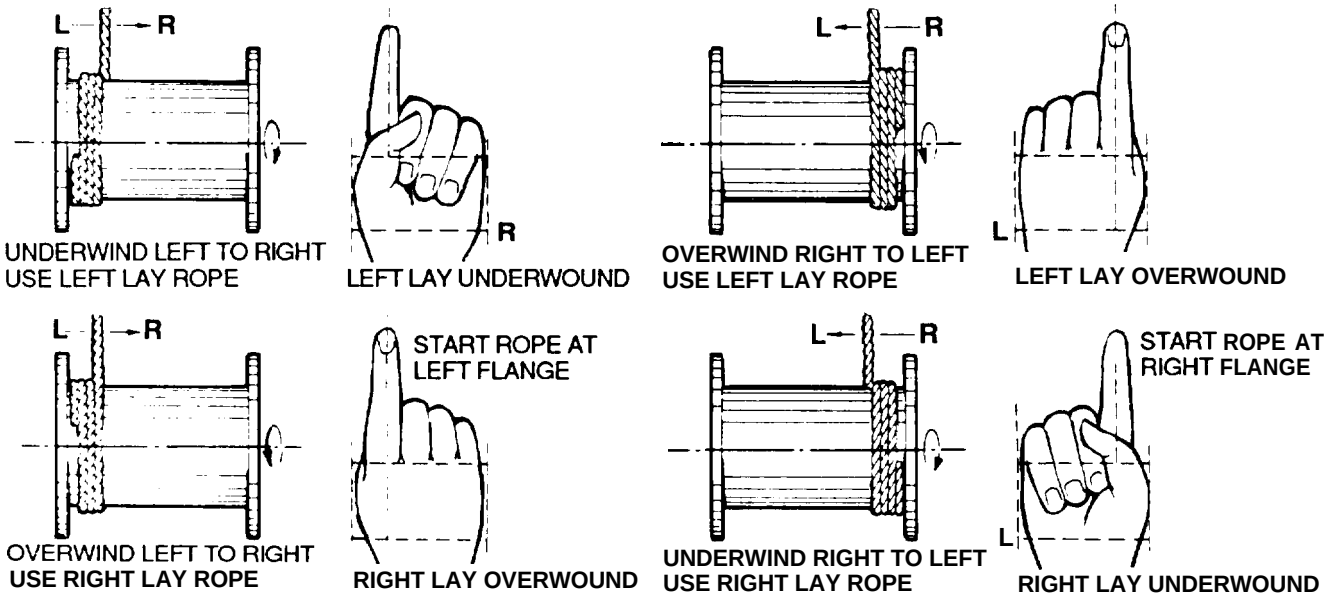

Figure 4-40 *Drum Winding and Appropriate Hand Signals*

Flexibility of Wire Rope

The term flexibility is frequently thought of as being synonymous with resistance to bending fatigue. This is not true. Flexibility refers to the capability of flexing or bending. While a high degree of fatigue resistance may sometimes accompany the flexibility characteristic, it does not necessarily follow that this is so. A fiber core rope, for example, is more flexible than an IWRC rope. Yet, when the IWRC rope is bent around undersize sheaves at relatively high loads, it will usually perform better than the more flexible fiber core rope. The reason for this lies in the ability of IWRC rope to retain its roundness and freedom of internal movement. Under the same conditions, a fiber core rope will flatten and inhibit free internal adjustment, thereby leading to early failure.

As noted earlier, a design choice is almost invariably the result of compromise. Ultimately, what is sought is an efficient, economical solution; hence, whatever the compromise, it must help achieve this goal.

Breaking in a New Wire Rope

A new wire rope requires careful installation and close adherence to all the appropriate procedures previously noted. After the rope has been installed and the ends secured in the correct manner, the mechanism should be started carefully and then permitted to run through a cycle of operation at very slow speed. During this trial operation, a very close watch should be kept on all working parts - sheaves, drums, rollers - to make certain that the rope runs freely, and without any possible obstructions as it makes its way through the system. If no problems appear in running the rope, the next step should include several run-throughs of the normal operational cycle under light load and at reduced speed. This procedure allows the component parts of the new rope to make a gradual adjustment to the actual operation conditions.

Wire Rope and Operations Inspection

To insure a high level of safety while keeping the annual cost of wire rope at a reasonably low level, it is essential to maintain a well-planned program of periodic inspection. Frequently, there are statutory and/or regulatory agencies whose requirements must be adhered to, but whether or not these exist in a given locale, the wire rope user can be guided by the suggested procedures that follow,

Abrasion, bending and crushing represent the ABC's of wire rope abuse, and it is the primary goal of good inspection practice to discover such conditions early enough so that corrections can be made or ropes replaced safely and with minimum effort. When any degradation indicates a loss of original rope strength, a decision must be made quickly as to allowing the rope to remain in service. But such a decision can only be made by an experienced inspector. And this determination will be based on:

1. Details of the equipment's operation: Will the rope break?

2. Frequency of inspection: Will it be safe until the next scheduled inspection?

3. Maintenance history: How rapid is the degradation?

4. Consequences of failure: Will it present hazards to personnel?

5. Historical records of similar equipment.

To make certain that sufficient information is obtained, following are guidelines that should be adhered to:

The groove size is evaluated on the basis of how the gage leaf fits the groove. Daylight under the gage is not tolerable when using the worn groove gage. If a full oversize gage is used, some daylight may be acceptable, but this really must be judged by relating the measurement to the actual size of the rope.

For new rope, extra caution should be observed as to its fit in the groove. Characteristically, ropes become smaller in diameter immediately after being placed in service. As a result, they would operate satisfactorily in a "worn" groove; one that was gaged OK by the" worn" groove gage. Nonetheless, in some cases, a rope may not "pull down," and if this happens, abnormal wear may occur.

It is important to remember that a tight groove not only pinches and damages the rope, but that the pinching prevents the necessary adjustment of the wires and strands. On the other hand, a groove that is too large will not provide sufficient support; in this case, the rope will flatten and thereby restrict the free sliding action of the wires and strands.

The size of the groove is not the only critical item to be examined closely. The condition of the groove is also an important factor of concern. Is it smooth or imprinted? If the groove is imprinted, then it must be re-machined or, if it is imprinted too deeply, it means that sheave, roller or drum must be replaced. If replacement is indicated, a larger sheave or drum should be installed if possible, or a harder material should be specified for the replacement

Groove examination should also concern itself with how the groove is wearing. If it is worn off-center, thereby forcing the rope to undercut or to rub against the flange, it then becomes necessary to correct the alignment of the reeving system, and to specify a harder material.

When checking the grooves, the bearings of the sheaves and rollers should also be examined. They should turn easily. If not, each bearing must be properly lubricated. “Wobble” in the sheave, from broken or worn bearings, is not acceptable. Bad bearings will set up vibrations in the wire rope that can cause rapid deterioration unless the condition is remedied. Bad bearings also increase the force on the rope that is needed to move a given load, since friction forces will be greatly increased.

Sheaves with broken flanges may allow the rope to jump from the sheave and become fouled in the machinery. When this happens, the rope is cut, curled, and the crowns of the wires in the strands are burred. There is ample evidence to support the rule that sheaves with broken flanges must be replaced immediately.

A sheave or drum with a flat spot can induce a “whip” into the line. This whip, or wave, travels until it is stopped by the end terminal, at which point the rope may bend severely. This condition helps to accelerate the fatigue breakage of wires. Sometimes the reeving is such that the whip or wave is arrested by a sheave, or the drum itself. In these circumstances, the whipping will cause wire breaks along the crowns of the strands. Obviously, sheaves or drums that excite vibrations of this sort must be repaired or replaced.

Guideline to Inspections and Reports for Equipment. wire Rope and Wire Rope Slings

1. Maintain all inspection records and reports for the length of time deemed appropriate.

2. Prior to each daily use, the following procedure should be followed:

   a. Check all equipment functions.

   b. Lower load blocks and check hooks for deformation or cracks.

   c. During lowering procedure and the following raising cycle, observe the rope and the reeving. Particular notice should be paid to kinking, twisting or other deformities. Drum winding conditions should also be noted.

   d. Check wire rope and slings for visual signs of anything that can cause them to be unsafe to use, i.e., broken wires, excessive wear, kinking or twisting, and marked corrosion. Particular attention should be given to any new damage during operation.

3. Monthly Inspections are recommended with a signed report by an authorized competent inspector. The Monthly Reports should include inspection of the following:

   a. All functional operation mechanisms for excessive wear of components, brake system parts and lubrication.

   b. Limit switches.

c. Crane hooks for excess throat opening or twisting along with a visual for cracks.

d. Wire rope and reeving for conditions causing possible removal.

e. Wire rope slings for excessive wear, broken wires, kinking, twisting and mechanical abuse.

f. All end connections such as hooks, shackles, turnbuckles, plate clamps, sockets, etc. for excessive wear and distortion.

4. An Annual Inspection with a signed report must be made for the following:

a. Crane hook for cracks.

b. Hoist drum for wear or cracks.

c. Structural members for cracks, corrosion and distortion.

d. For loose structural connections such as bolts, rivets and weldments.

Wire Rope Inspection

The following is a fairly comprehensive listing of critical inspection factors. It is not, however, presented as a substitute for an experienced inspector. It is rather a user's guide to the accepted standards by which ropes must be judged.

1. Abrasion: Rope abrades when it moves through an abrading medium or over drums and sheaves. Most standards require that rope is to be removed if the outer wire wear exceeds 1/3 of the original outer wire diameter. This is not easy to determine and discovery relies upon the experience gained by the inspector in measuring wire diameters of discarded ropes.

2. Rope stretch: All ropes will stretch when loads are initially applied. As rope deteriorates from wear, fatigue, etc. (excluding accidental damage), continued application of a load of constant magnitude will produce varying amounts of rope stretch. A "stretch" curve plotted for stretch vs. time (Figure 4-41) displays three discrete phases:

a. Initial stretch, during the early (beginning) period of rope service, caused by the rope adjustments to operating conditions (constructional stretch).

b. Following break-in, there is a long period - the greatest part of the rope's service life - during which a slight increase in stretch takes place over an extended time. This results from normal wear, fatigue, etc. On the plotted curve - stretch vs. time - this portion would almost be a horizontal straight line, inclined slightly upward from its initial level.

c. Thereafter, the stretch begins to increase at a quicker rate. This means that the rope is reaching the point of rapid deterioration; a result of prolonged subjection to abrasive wear, fatigue, etc. This second upturn of the curve is a warning indicating that the rope should soon be removed.

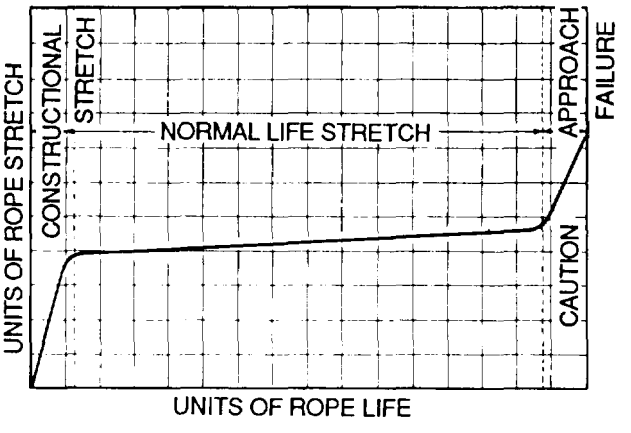

Figure 4-41. *Stretch vs. Time*

3. Reduction in rope diameter: Any marked reduction in rope diameter indicates degradation. Such reduction may be attributed to:

   a. Excessive external abrasion.

   b. Internal or external corrosion.

   c. Loosening or tightening of rope lay.

   d. Inner wire breakage.

   e. Rope stretch.

   f. Ironing or milking of strands.

   In the past, whether or not a rope was allowed to remain in service depended to a great extent on the rope's diameter at the time of inspection. Currently this practice has undergone significant modification.

   Previously, a decrease in the rope's diameter was compared with published standards of minimum diameters. The amount of change in diameter is, of course, useful in assessing a rope's condition. But, comparing this figure with a fixed set of values is, for the most part, useless. These long-accepted standards are not, in themselves, of any serious significance since they do not take into account such factors as:

   a. Variations in compressibility between IWRC and Fiber Core.

   b. Differences in the amount of reduction in diameter from abrasive wear, or from core compression, or a combination of both.

   c. The actual original diameter of the rope rather than its nominal value.

   As a matter of fact, all ropes will show a significant reduction in diameter when a load is applied. Therefore, a rope manufactured close to its nominal size may, when it is subjected to loading, undergo a greater reduction in diameter than that stipulated in the minimum diameter table. Yet, under these circumstances, the rope would be declared unsafe although it may, in actuality, be safe.

   As an example of the possible error at the other extreme, we can take the case of a rope manufactured near the upper limits of allowable size. If the diameter has reached a reduction to nominal or slightly below that, the tables would show this rope to be safe. But it should, perhaps, be removed.

   Today, evaluations of the rope diameter are first predicated on a comparison of the original diameter - when new and subjected to a known load - with the current reading under like circumstances. Periodically, throughout the life of the rope, the actual diameter should be recorded when the rope is under equivalent loading and in the same operating section. This procedure, if followed carefully, reveals a common rope characteristic: after an initial reduction, the diameter soon stabilizes. Later, there will be a continuous, albeit small, decrease in diameter throughout its life.

   Core deterioration, when it occurs, is revealed by a more rapid reduction in diameter and when observed it is time for removal.

   Deciding whether or not a rope is safe is not always a simple matter. A number of different but interrelated conditions must be evaluated. It would be dangerously unwise for an inspector to declare a rope safe for continued service simply because its diameter had not reached the minimum arbitrarily established in a table if, at the same time, other observations lead to an opposite conclusion.

Because criteria for removal are varied, and because diameter, in itself, is a vague criterion, the table of minimum diameters has been deliberately omitted from this manual.

4. Corrosion: Corrosion, while difficult to evaluate, is a more serious cause of degradation than abrasion. Usually, it signifies a lack of lubrication. Corrosion will often occur internally before there is any visible external evidence on the rope surface. Pitting of wires is a cause for immediate rope removal. Not only does it attack the metal wires, but it also prevents the rope's component parts from moving smoothly as it is flexed. Usually, a slight discoloration because of rusting merely indicates a need for lubrication.

   Severe rusting, on the other hand, leads to premature fatigue failures in the wires, necessitating the rope's immediate removal from service. When a rope shows more than one wire failure adjacent to a terminal fitting, it should be removed immediately. To retard corrosive deterioration, the rope should be kept well lubricated. In situations where extreme corrosive action can occur, it may be necessary to use galvanized wire rope.

5. Kinks: Kinks are permanent distortions caused by loops drawn too tightly. Ropes with kinks must be removed from service.

6. "Bird caging": Bird caging results from torsional imbalance that comes about because of mistreatments such as sudden stops, the rope being pulled through tight sheaves, or wound on too small a drum. This is cause for rope replacement unless the affected portion can be removed.

7. Localized conditions: Particular attention must be paid to wear to the equalizing sheaves. During normal operations this wear is not visible. Excessive vibration or whip can cause abrasion and/or fatigue. Drum crossover and flange point areas must be carefully evaluated. All end fittings, including splices, should be examined for worn or broken wires, loose or damaged strands, cracked fittings, worn or distorted thimbles and tucks of strands.

8. Heat Damage: After a fire or the presence of elevated temperatures, there may be metal discoloration or an apparent loss of internal lubrication; fiber core ropes are particularly vulnerable. Under these circumstances, the rope should be replaced.

9. Protruding Core: If, for any cause, the rope core protrudes from an opening between the strands, the rope is unfit for service.

10. Damaged End Attachments: Cracked, bent, or broken end fittings must be eliminated. The cause should be sought out and corrected. In the case of bent hooks, the throat openings - measured at the narrowest point - should not exceed 15% over normal nor should twisting be greater than 10%.

11. Peening: Continuous pounding is one of the causes of peening. The rope strikes against an object such as some structural part of the machine, or it beats against a roller, or it hits itself. Often, this can be avoided by placing protectors between the rope and the object it is striking. Another common cause of peening is continuous passage, under high tension, over a sheave or drum. Where peening action cannot be controlled, it is necessary to have more frequent inspections and to be ready for earlier rope replacement.

    The external appearance of two ropes are illustrated, one of which has been abraded and the other peened (Figure 4-42). Also shown are the cross-section of both wires in these conditions. Note that a crack has formed as a result of heavy peening.

12. Scrubbing: Scrubbing refers to the displacement of wires and strands as a result of rubbing around or against an object. This, in turn, causes wear and displacement of wires and strands along one side of the rope. Corrective measures should be taken as soon as this condition is observed.

13, Fatigue Failure: Wires that break with square ends and show little surface wear have usually failed as a result of fatigue. Such failures can occur on the crown of the strands, or in the valleys between the strands where adjacent strand contact exists. In almost all cases, these failures are related to bending stresses or vibration.

    If the diameter of the sheaves, rollers or drum cannot be increased, a more flexible rope should be used. But, if the rope in use is already of maximum flexibility, the only remaining course that will help prolong its service life is to move the rope through the system by cutting off the dead end. By moving the rope through the system, the fatigued sections are moved to less fatiguing areas of the reeving. This technique is most frequently used in rotary drilling.

14. Broken Wires: The number of broken wires on the outside of a wire rope are considered an index of its general condition, and whether or not it must be considered for replacement. Frequent inspection will help determine the elapsed time between breaks. Ropes should be replaced as soon as the wire breakage reaches the numbers given in Table 7. Such action must be taken without regard to the type of fracture.

    On occasion, a single wire will break shortly after installation. However, if no other wires

Table 7. When to Replace Wire Rope. Based on Number of Broken Wires

		Number Broken Wires In Running Ropes		Number Broken Wires In Standing Ropes	
ANSI No.	Equipment	In One Rope Lay	In One Strand	In One Rope Lay	At End Connection
B30.5	Crawler. Locomotive & Truck Cranes	6	3	3	2

break at that time, there is no need for concern. On the other hand, should more wires break, the cause should be carefully investigated.

On any installation, valley breaks - i.e., where the wire ruptures between strands - should be given serious attention. When two or more such conditions are found, the rope should be replaced immediately.

It is well to remember that once broken wires appear - in a normal rope operating under normal conditions - a good many more will show up within a relatively short period. Attempting to squeeze to the last measure of service from a rope beyond the allowable number of broken wires (Table 7) will create an intolerably hazardous situation.

A diagnostic guide to some of the most prevalent rope abuses is given in Table 8. On the following pages these abuses are illustrated and described.

A wire that has broken under a tensile load in excess of its strength is recognized by the "cup and cone" configuration at the fracture point (A, Figure 4-43). The necking down of the wire at point of failure shows that failure occurred while the wire retained its ductility. A fatigue break is usually characterized by squared-off ends perpendicular to the wire either straight across or Z-shaped (B) and **(c).**

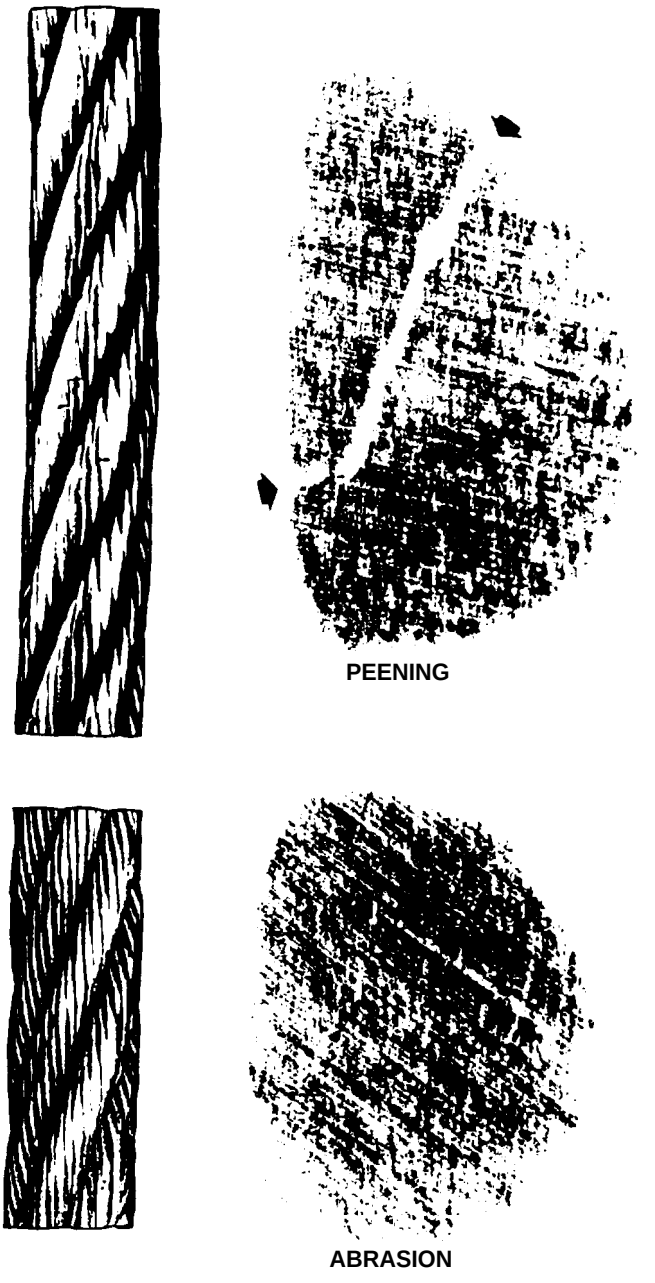

Figure 4-42. *Effects of Abrasion and Peening*

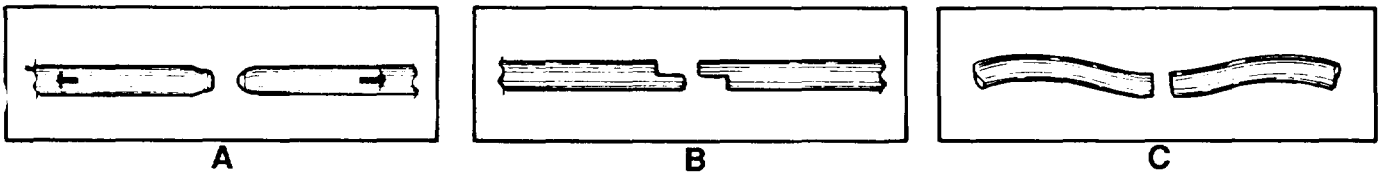

Figure 4-43. *Types of Breaks in Wire Rope*

Table 8. Diagnostic Guide to Common Wire Rope Abuses

Abuse	Symptoms	Possible Causes
Fatigue	Wire break is transverse - either straight across or Z-shaped. Broken ends will appear grainy,	Check for rope bent around too small a radius; vibration or whipping; wobbly sheaves; rollers too small; reverse bends; bent shafts; incorrect rope construction; improper installation; poor end attachments. All running rope if left in service long enough will fail by fatigue.
Tension	Wire break reveals predominantly cup and cone fracture with some 45-degree shear breaks.	Check for overloads; sticky, grabby clutches; jerky conditions; loose bearing on drum; fast starts, fast stops; broken sheave flange; wrong rope size and grade; poor end attachments. Check for too great a strain on rope after factors of deterioration have weakened it.
Abrasion	Wire break mainly displays outer wires worn smooth to knife-edge thinness. Wire broken by abrasion in combination with another factor will show a combination break.	Check for change in rope or sheave size; change in load; overburden change; frozen or stuck sheaves; soft rollers, sheaves, or drums; excessive fleet angle; misalignment of sheaves; kinks; improperly attached fittings; grit and sand; objects imbedded in rope; improper grooving.
Cut or Gouged or Rough Wire	Wire ends are pinched down, mashed and/or cut in a rough diagonal shear-like manner.	Check on all the above conditions for mechanical abuse, or either abnormal or accidental forces during installation.
Torsion or Twisting	Wire ends show evidence of twist and/or cork-screw effect.	Check on all the above conditions for mechanical abuse, or either abnormal or accidental forces during installation.
Mashing	Wires are flattened and spread at broken ends.	Check on all the above conditions for mechanical abuse, or either abnormal or accidental forces during installation.
Corrosion	Wire surfaces are pitted with break showing evidence either of fatigue tension or abrasion.	Indicates improper lubrication or storage.
Abrasion plus Fatigue	Reduced cross-section is broken off square thereby producing a chisel shape.	A long-term condition normal to the operating process.
Abrasion plus Tension	Reduced cross-section is necked down as in a cup and cone configuration. Tensile break produces a chisel shape.	A long-term condition normal to the operating process.

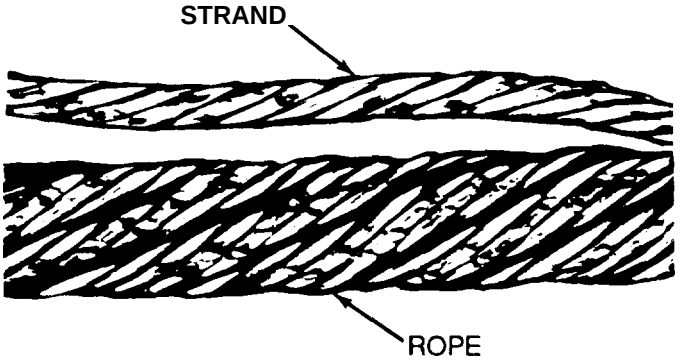

Figure 4-44. *Interstrand and Core-to-Strand*

Illustrated Examples of Possible Wire Rope Damage

1. Interstrand and core-to-strand nicking: A strand has been removed from the rope to show the equivalent lines of nicking where strands are in contact with one another, as well as with the core (Figure 4-44).

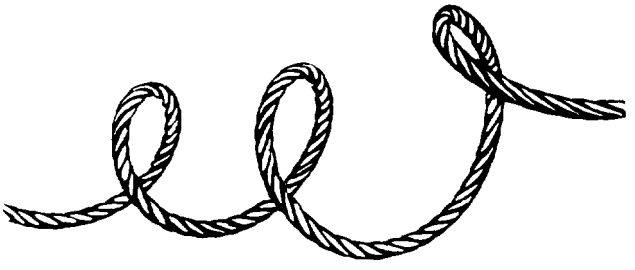

Figure 4-45. *Cork-Screw Rope*

2. Cork-screwed rope: This condition results from rope being pulled around an object having a small diameter (Figure 4-45).

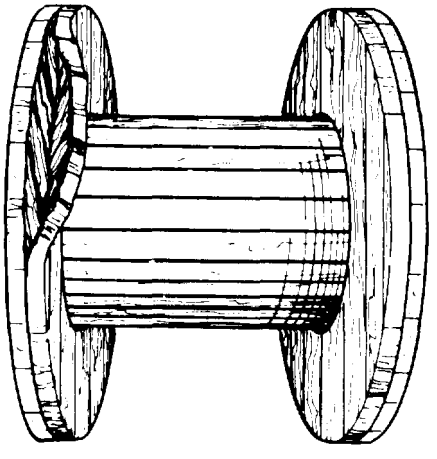

Figure 4-46. *Damaged Reel*

3. Damaged reel: When a reel has been damaged in transit, it is a safe assumption that irreparable damage has been done to the rope (Figure 4-46).

4. Shipping damage: Wire rope abuses during shipment create serious problems (Figure 4-47). One of the more common causes is improper fastening of rope end to reel, e.g., nailing through the rope end. These illustrations show two acceptable methods:

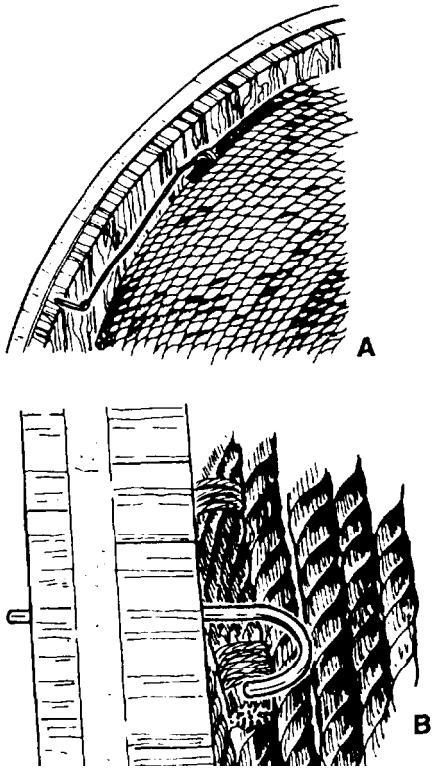

Figure 4-47. *Shipping Damage*

a. One end of a wire "noose" holds the rope and the other end is secured to the reel (A).

b. The rope end is held in place by a J-bolt or U-bolt that is fixed to the reel (B).

5. "High strand" wire rope: The excessive wear of a single strand is caused by improper socketing (Figure 4-48).

Figure 4-48. *"High Strand" Wire Rope*

6. Incorrect handling results indifferent types of damage to wire rope (Figure 4-49):

a. Rope damaged by being rolled over some sharp object (A).

b. Damage resulting from bad drum winding (B).

c. Drum crushing is evidence of bad winding conditions (C).

d. Damage resulting from a deeply corrugated sheave (D).

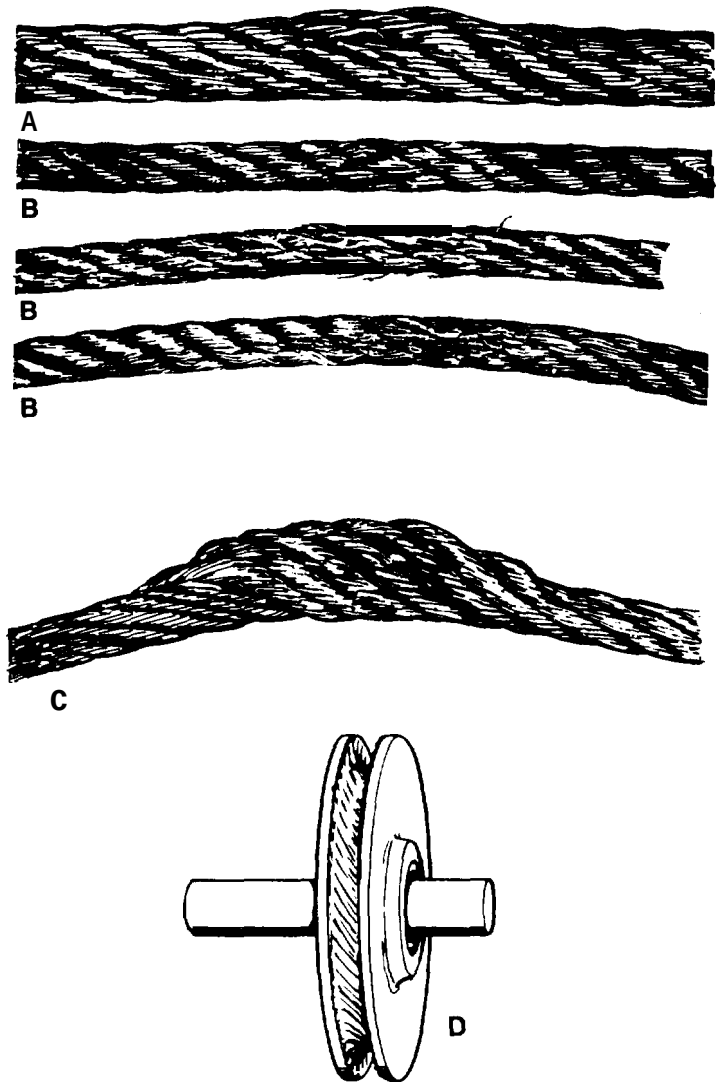

Figure 4-49. *Damage From Incorrect Handling*

7. There are different types of wire rope damage (Figure 4-50):

   a. Dog leg (A).

   b. Popped core (B).

   c. Bird caging (C).

   d. Snagged strand wires (D).

   e. Spiraling that is brought about when rope jumps from the sheave (E).

   f. A tension break resulting from overloading (F).

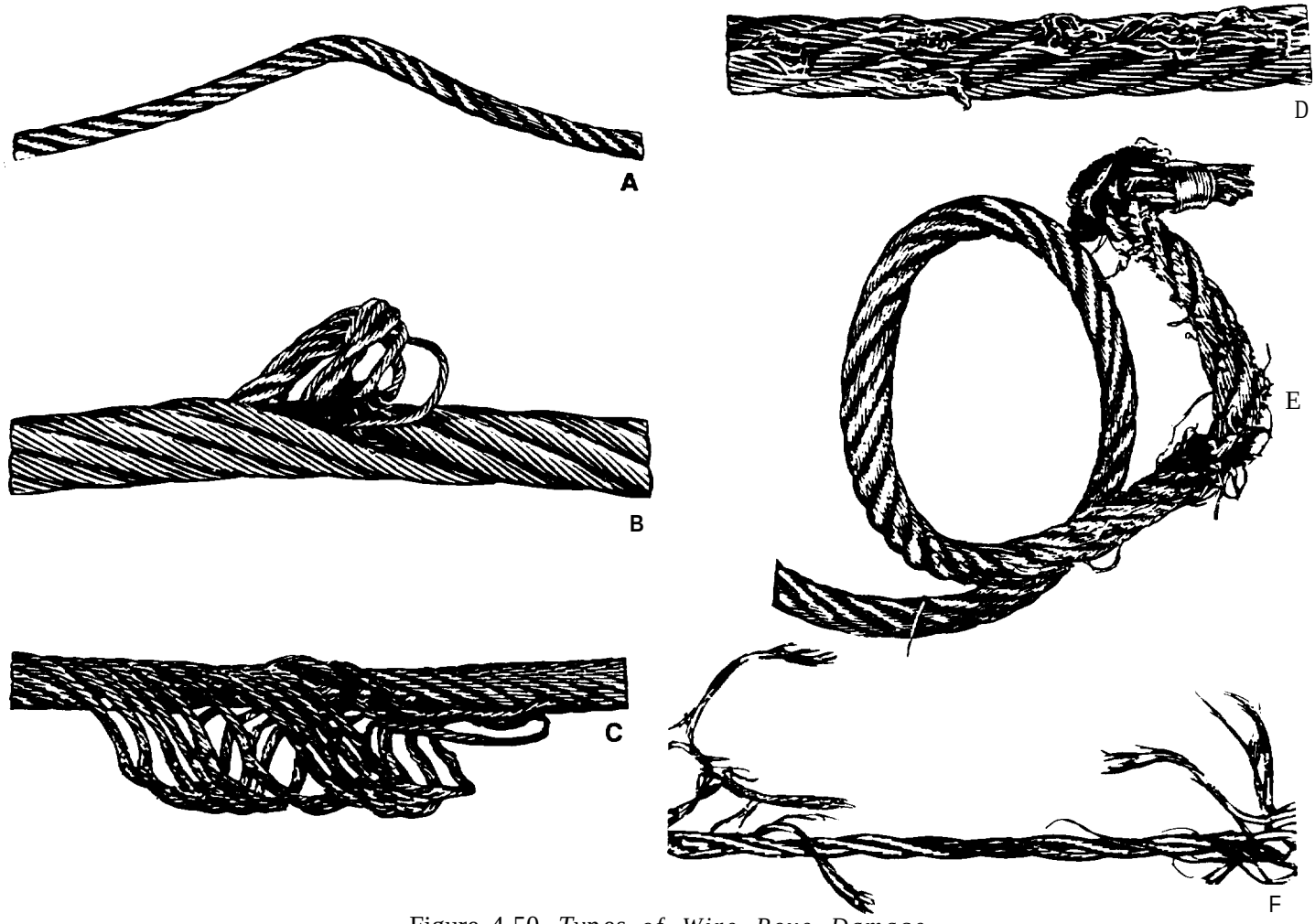

Figure 4-50. *Types of Wire Rove Damage*

8. There are different types of wearing of wire rope (Figure 4-5 1):

   a. From excessive bending (A).

   b. Localized wear brought about by poor cut-off practice (B).

   c. Rope slides over or against itself (C).

   d. Flexing the rope exposes broken wires hidden in valleys between strands. This is known as valley-type fatigue breaks (D).

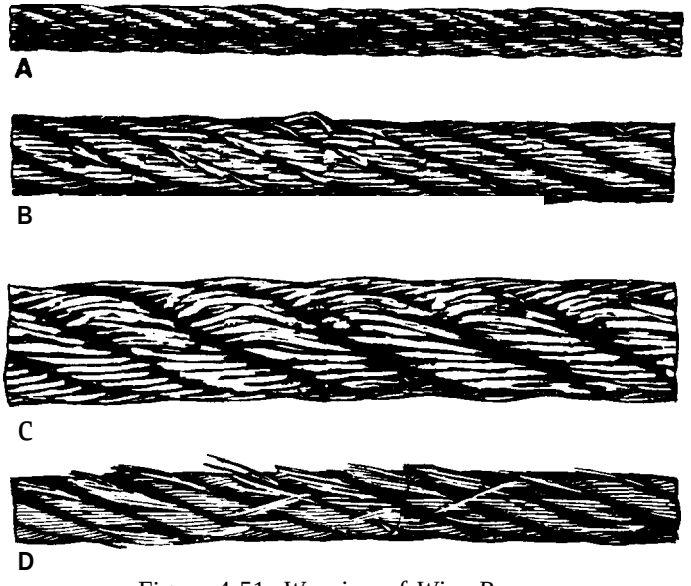

Figure 4-51. *Wearing of Wire Ropes*

Rope Inspection Summary

Any wire rope that has broken wires, deformed strands, variations in diameter or any change from its normal appearance must be considered for replacement. It is always better to replace a rope when there is any doubt concerning its condition or its ability to perform the required task. The cost of wire rope replacement is quite insignificant when considered in terms of injuries to personnel, the cost of down time or the cost of replacing broken structures.

Wire rope inspection includes examination of basic items such as:

1. Rope diameter reduction.

2. Rope lay.

3. External wear.

4. Internal wear.

5. Peening.

6. Scrubbing.

7. Corrosion.

8. Broken wires.

Some sections of rope can breakup without any prior warning. Already discussed in some detail as to cause and effect, sections where this occurs are ordinarily found at the end fittings, and at the point where the rope enters or leaves the sheave groove of boom hoists, suspension systems or other semi-operational systems. Because of the "working" that takes place at these sections, no appreciable wear or crown breaks will appear. Under such an operation, the core fails thereby allowing the strands to notch adjacent strands. However, when this happens, valley breaks will appear. As soon as the first valley break is detected, the rope should be removed immediately.

If preventive maintenance, previously described, is diligently performed, the rope life will be prolonged and the operation will be safer. Cutting off a given length of rope at the end attachment before the core deteriorates and valley breaks appear, effectively eliminates these sections as a source of danger.

Equipment Inspection

Any undetected fault on a sheave, roller or drum, be it of relatively major or minor significance, can cause a rope to wear out many times faster than the wear resulting from normal operations. As a positive means of minimizing abuses and other-than-normal wear, the procedures here set forth should be adhered to. Every observation and measurement should be carefully recorded and kept in some suitable and accessible file.

1. Give close examination to the method by which the rope is attached both to the drum and to the load. Make certain that the proper means of attachment is applied correctly, and that any safety devices in use are in satisfactory working order.

2. Carefully check the groove and working surface of every sheave, roller and drum to determine whether each (groove and surface) is as near to the correct diameter and contour as circumstances will permit, and whether all surfaces that are in contact with the rope are smooth and free of corrugations or other abrasive defects.

3. Check sheaves and rollers to determine whether each turns freely, and whether they are properly aligned with the travel of the rope. All bearings must be in good operating condition and furnish adequate support to the sheaves and rollers. Sheaves that are permitted to wobble will create additional forces that accelerate the deterioration rate of the rope.

4. If starter, filler and riser strips on drums are used, check their condition and location. Should these be worn, improperly located or badly designed, they will cause poor winding, dog legs and other line damage.

5. Whenever possible, follow the path that the rope will follow through a complete operating cycle. Be on the lookout for spots on the equipment that have been worn bright or cut into by the rope as it moves through the system. Ordinarily, excessive abrasive wear on the rope can be eliminated at these points by means of some type of protector or roller.

Cable Lubrication

Refer to Appendix B, page B-2 for complete information regarding lubrication of the cable.

Section VI
Operation Under Emergency or Abnormal Conditions

Emergency Load Lowering Procedure.

In the event that lowering a suspended load by the normal means is impossible due to engine failure, pump failure or a hydraulic line failure, a hydraulic hand pump is provided. The following procedures will restore the vehicle to a normal traveling or towing attitude.

WARNING

During the execution of this procedure, the danger exists of uncontrollably dropping a load. Rotate the upperstructure to a safe position. Failure to follow this procedure could cause DEATH or serious injury.

NOTE

Two men are required to perform this task.

Swing the Boom Mechanically

1. Remove three nuts (1), bolt (2), three washers **(3),** five bolts **(4),** washers **(5),** deck plate **(6),** and pinion cover (7, Figure 4-52).

NOTE

Move swing lever in same swing direction to relieve oil pressure as the upperstructure is being turned.

2. Attach a wrench to the protruding shaft of the swing box drive. Turn swing box drive shaft clockwise to swing boom to the right and counterclockwise to swing boom to the left.

3. Rotate the upperstructure and the load to a safe area.

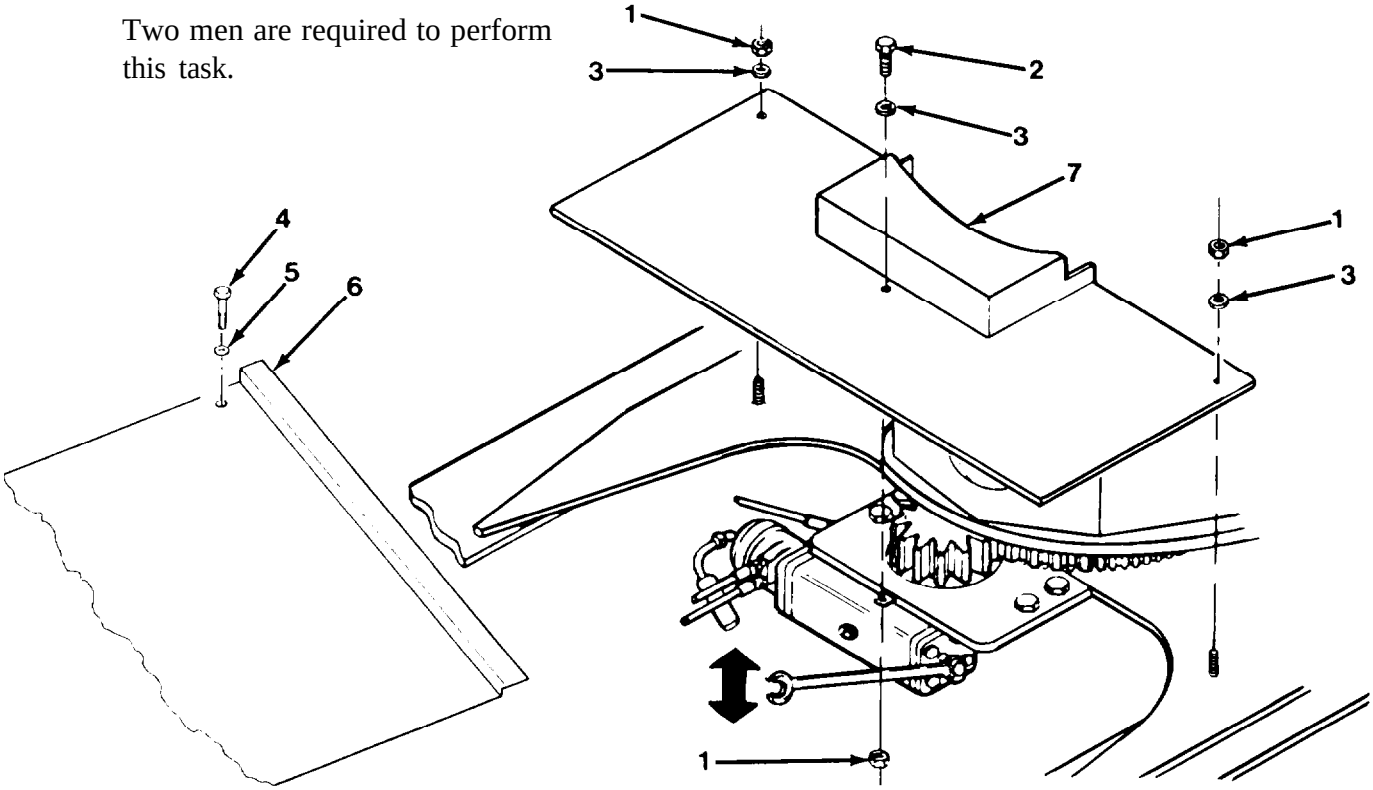

Figure 4-52. Swing Drive Box

Prepare Equipment

The hand pump is mounted in the left side tool box. The pump supply and pressure hose with a connector tee is also located in this box.

The pump is used from this location by inserting the pin in the pump handle,

Attach Supply Hose

Attach the quick disconnect on the pump supply hose to the nipple on the reservoir side of the filter manifold (Figure 4-53).

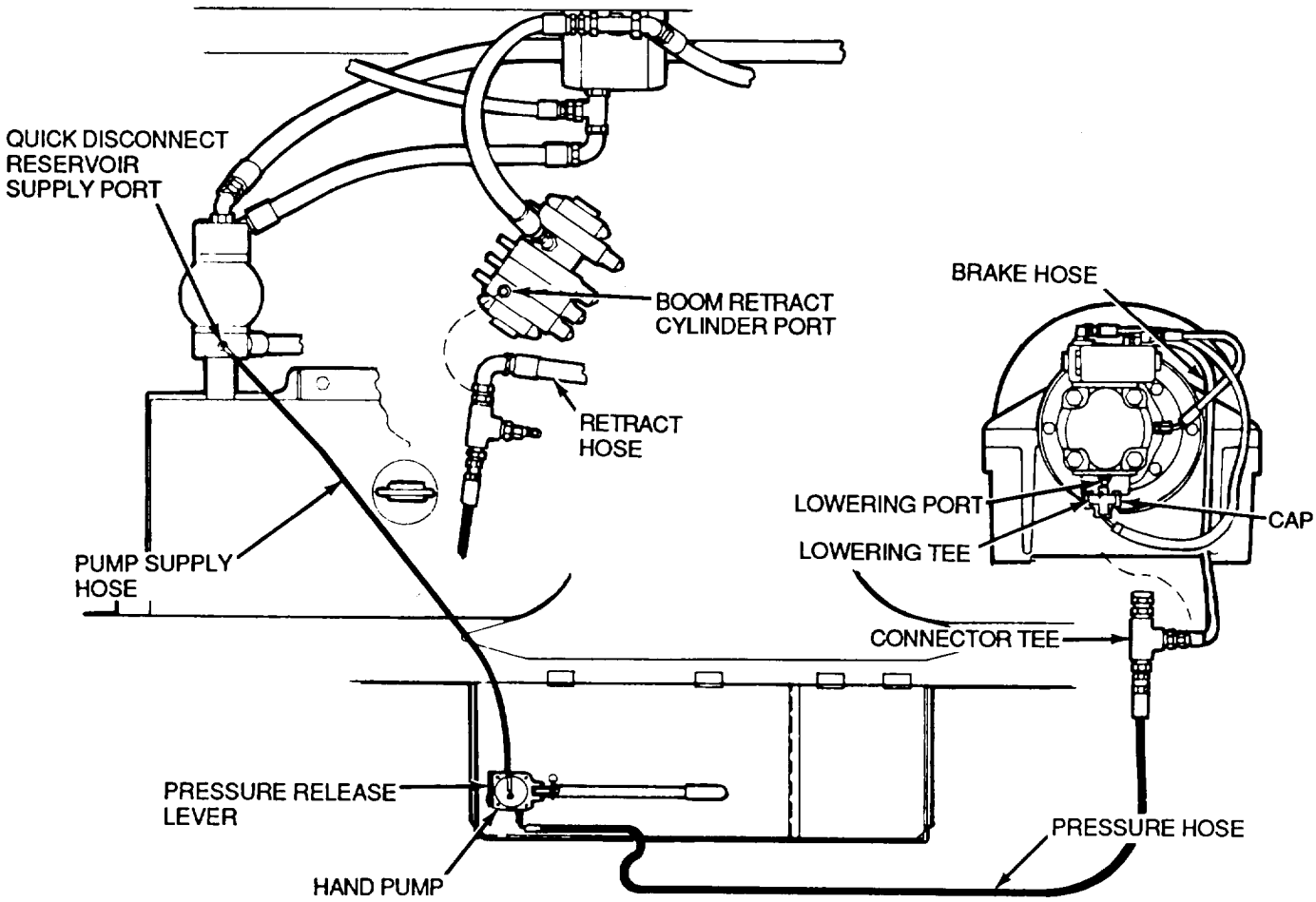

Figure 4-53. *Quick Disconnect on Supply Hose*

Lower Load with Winch

NOTE

If there is no load on hook proceed to **Retract Boom.**

1. Bring hand pump pressure hose up to winch and remove smallest cap on the connector tee.

2. Disconnect the brake hose from the tee in the lowering port on the winch motor.

WARNING

Entry of air into lowering port will cause winch motor to cavitate. The winch motor lowering port tee must be capped to prevent load from free falling when hand pump pressure is applied. Failure to follow this procedure could cause DEATH or serious injury.

3. Install cap on winch motor lowering port tee.

4. Connect connector tee to winch brake hose.

WARNING

When working the hand pump, clear all personnel from the area. Failure to follow this procedure could cause DEATH or serious injury.

5. Close pressure release lever on pump. Pump slowly until winch brake is released. The load will lower slowly to the ground.

6. With the load safely down, open pressure release lever on hand pump.

7. Disconnect brake hose from connector tee and reattach to lowering port tee. Install cap on connector tee.

8. Using a wrench on the swing box, rotate upperstructure back to the travel position.

Retract Boom

WARNING

Never disconnect hydraulic lines or fittings before venting pressure. Turn dipstick cap 1/4 turn to safety notch to relieve pressure. Failure to follow this procedure could cause SERIOUS INJURY.

1. Turn dipstick 1/4 turn to safety notch to relieve pressure.

2. Locate counterbalance valve on top of boom extend cylinder at base of boom.

3. Loosen jam nut on counterbalance valve extending up from valve block and turn the adjusting screw in until it bottoms (Figure 4-54). Keep track of number of turns required to bottom out screw.

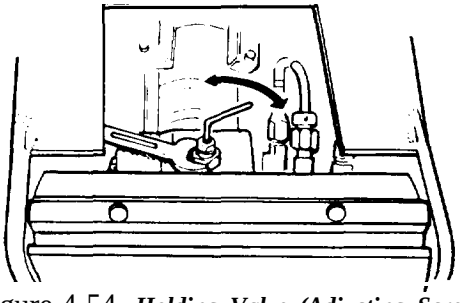

Figure 4-54. *Holding Valve (Adjusting Screw)*

4. Turn ignition switch ON and pull back on boom telescope lever until boom is fully retracted.

NOTE

If boom retracts, proceed to step 12.

5. Remove hose from retract port adapter on control valve extend/retract section (first section from the left side) (refer to Figure 4-53).

6. Take cap off largest adapter on connector tee, and put it on valve adapter.

7. Attach connector tee to the retract hose.

NOTE

Another person is required in the cab to pull back on boom telescope lever to open valve and allow oil to flow thru valve while pumping is taking place.

8. Pull back on boom telescope lever.

9. Close pressure release lever on hand pump and pump until boom is fully retracted.

10. When boom is retracted, open pressure release lever on pump and disconnect connector tee from retract hose.

11. Connect retract hose to boom retract cylinder port adapter.

12. Back out adjusting screw on extend cylinder counter balance valve to its exact original adjustment (turns) and tighten jam nut.

13. Turn ignition switch OFF.

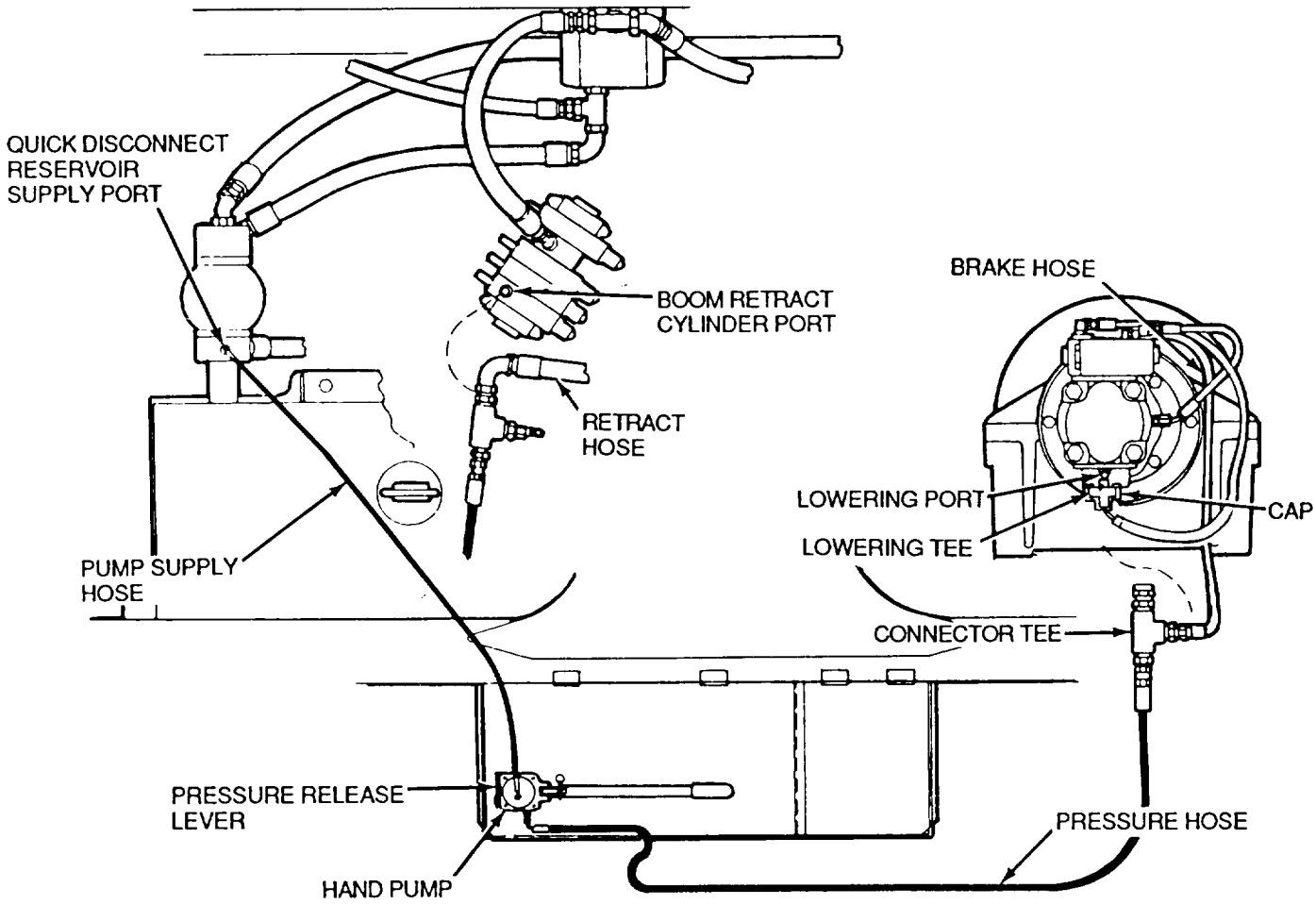

Figure 4-53. *Quick Disconnect on Supply Hose*

Lower Boom

WARNING

When lowering boom to a horizontal position, work from side of upperstructure, not under boom. Failure to follow this procedure could cause DEATH or serious injury.

1. With a 5/ 16 in. hex allen wrench, remove plug from the hold valve cartridge protruding up on bottom side of hoist cylinder (Figure 4-55).

2. With the same wrench, back-out internal plug counterclockwise until wire retaining ring stops it. Do not force plug beyond this point. It cannot be removed because approximately 0.5 in. (13 mm) of threads remain at stop.

WARNING

Everyone must be clear of the area before moving hoist control lever. Failure to follow this procedure could cause DEATH or serious injury.

3. Turn ignition switch ON. Push forward on boom hoist control lever in cab until boom is lowered to horizontal position.

4. Turn ignition switch OFF.

5. Swing boom mechanically over one side (refer to page 4-56).

6. Tighten internal plug on hold valve cartridge until it bottoms out in the original position. Replace plug.

7. Swing boom mechanically over cab (refer to page 4-56).

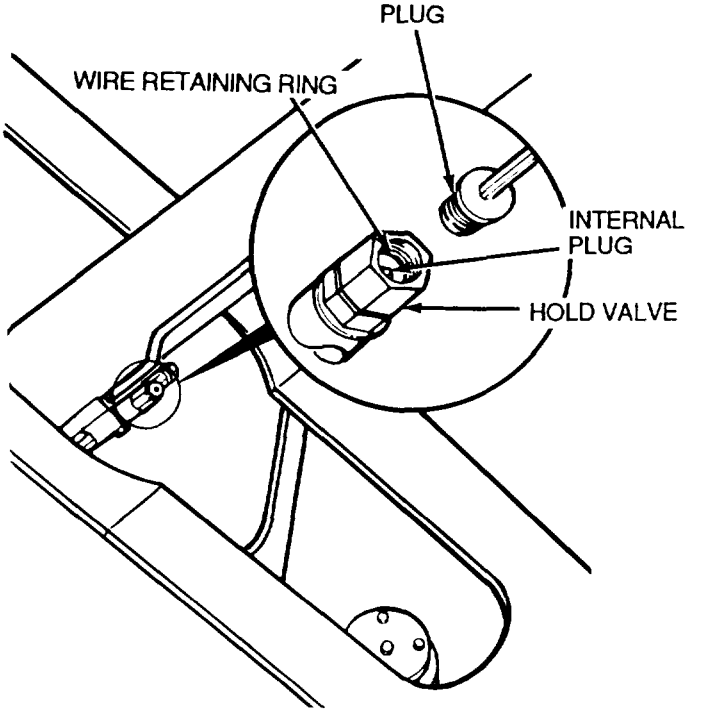

Figure 4-55. Internal Plug

Lower the LRT 110 Crane Off the Outriggers

WARNING

Never disconnect hydraulic lines or fittings before venting pressure. Turn dipstick cap 1/4 turn to safety notch to relieve pressure. Failure to follow this procedure could cause SERIOUS INJURY.

1. Turn dipstick 1/4 turn to safety notch to relieve pressure.
2. Remove reducer -6 to -4 and cap -4 from connector tee on pressure hose (Figure 4-56).
3. Remove single return hose and adapter from tee and connect connector tee to tee.
4. Use reducer -6 to -4 and cap -4 to cap adapter on single return hose removed from tee in step 3.
5. Remove appropriate extend hose from outrigger solenoid.

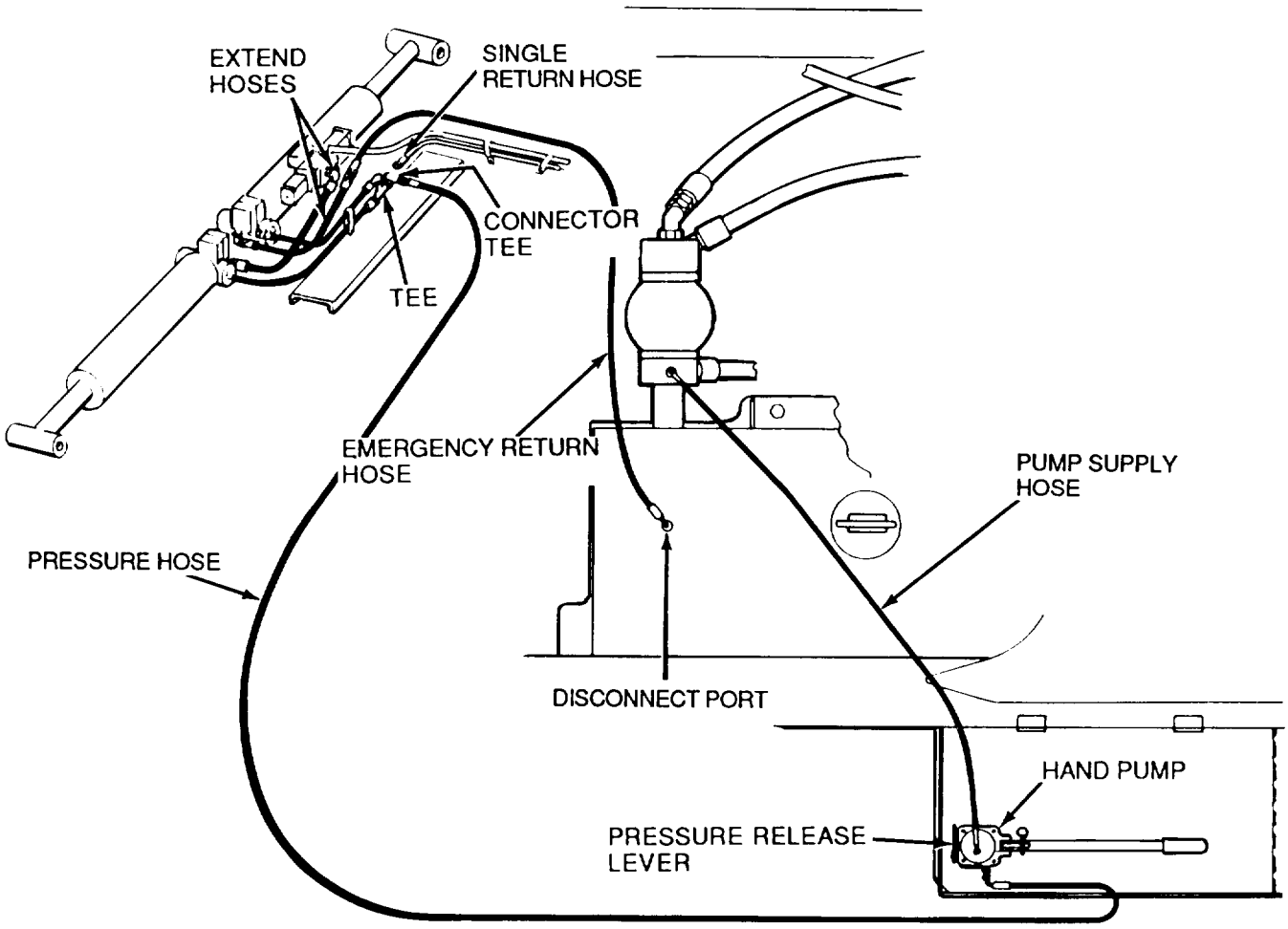

Figure 4-56. *Lowering the LRT Crane off the Outriggers*

6. Remove plug and place elbow and female quick disconnect on one end of emergency return hose and connect hose to disconnect port on top of hydraulic reservoir. Remove cap and connect other end of emergency return hose to outrigger extend hose (Figure 4-56).

7. Close pressure release lever on hand pump. Pump to retract outrigger to travel position.

8. Repeat steps 5 thru 7 for each outrigger as necessary.

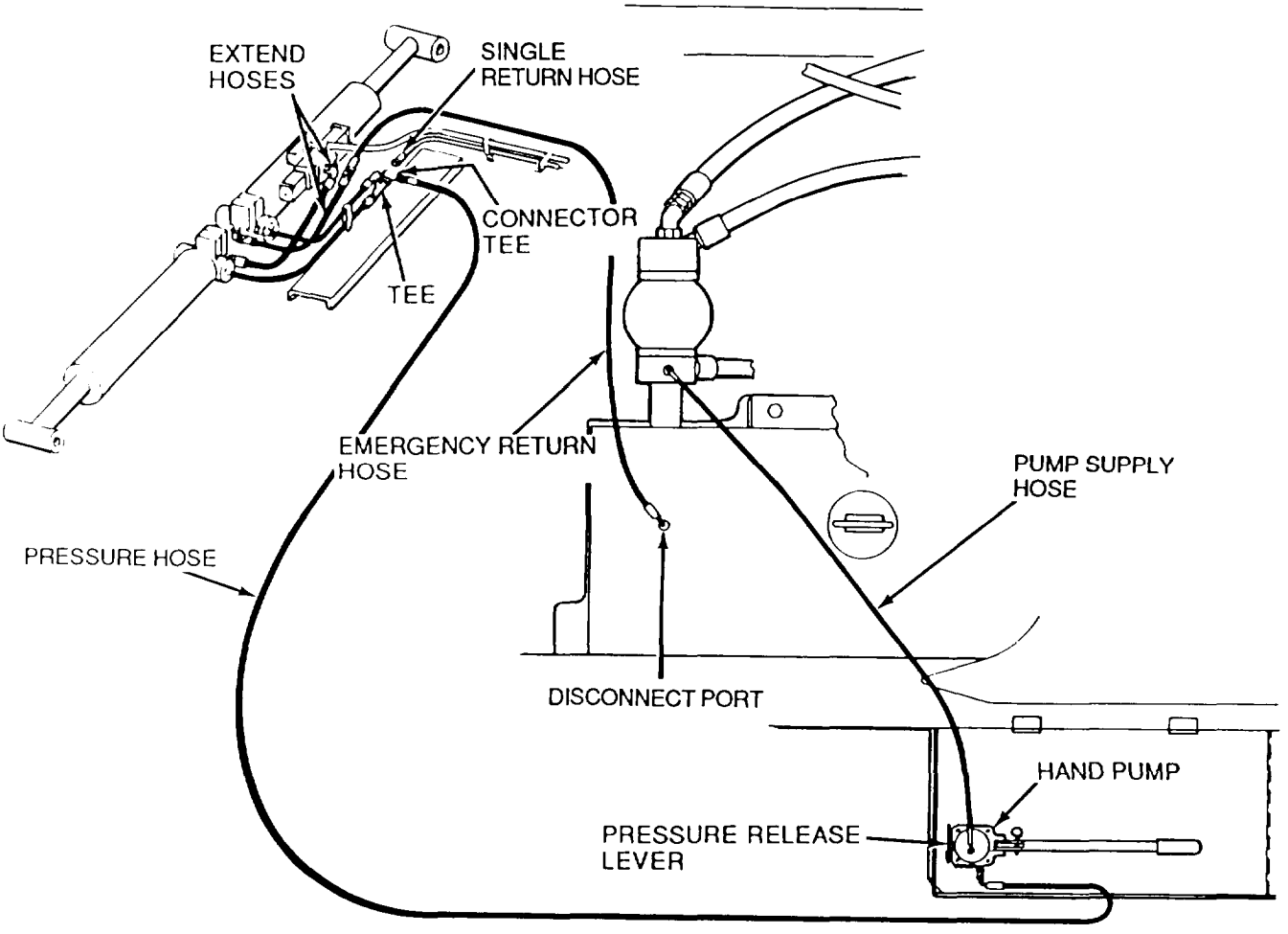

Figure 4-56. *Lowering the LRT Crane off the Outriggers*

9. Remove pressure hose, emergency return hose and pump supply hose, replace caps and place in tool box.

10. Connect outrigger hoses.

11. Remove pin from pump handle and store in tool box.

12. Install pinion cover (7), deck plate (6), five washers (5), bolts (4), three washers (3), bolt (2), and three nuts (1, Figure 4-52).

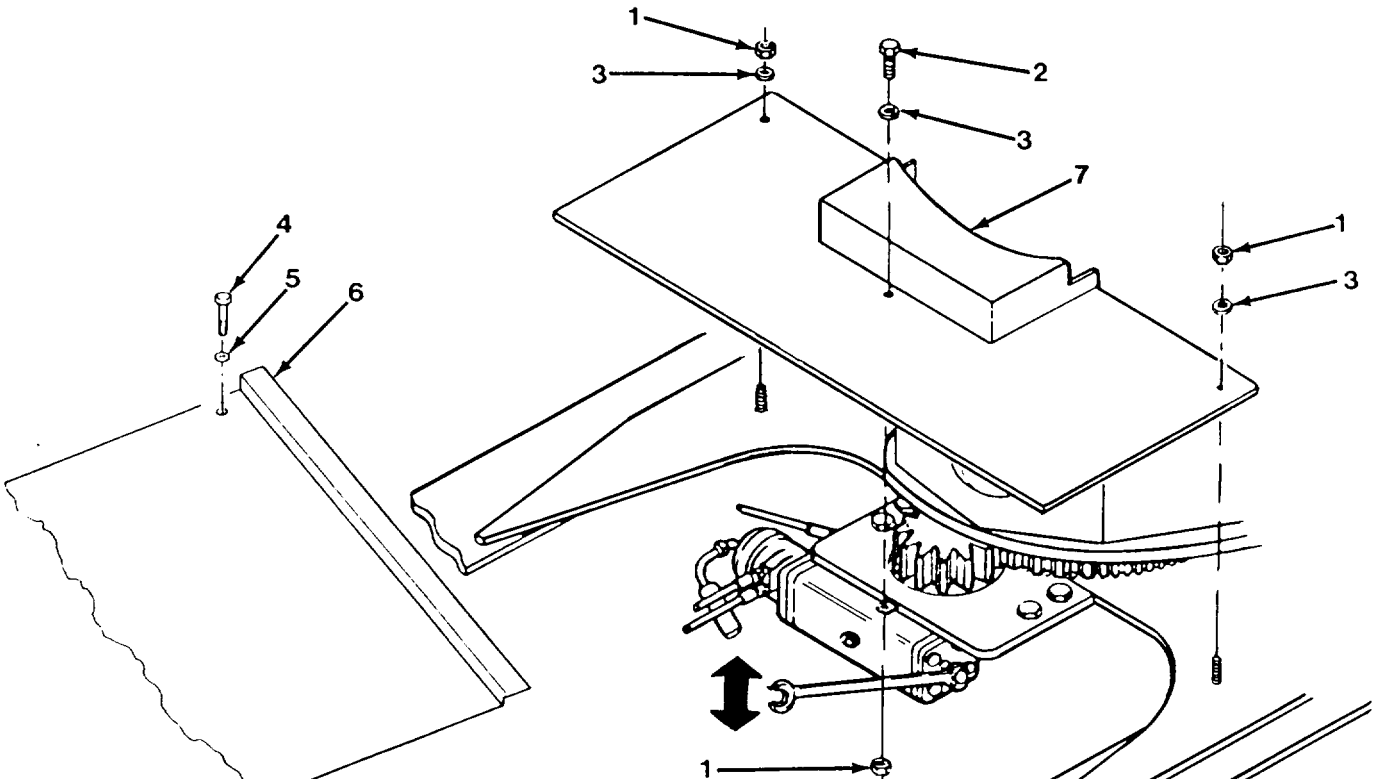

Figure 4-52. Swing Drive Box

Secure Hook Block

1. If cable and hook block are lying on the ground after completing these emergency procedures, tighten cable and install wood block on winch to retain tension on cable. Remove cable from hook block socket and secure cable to vehicle.

WARNING

Weight of the hook block is approximately 235 lb (107 kg). Use adequate hoist and sling to lift hook block. Do not lift over personnel or let personnel walk underneath suspended load. Failure to follow this procedure could cause DEATH or serious injury.

2. Using hoist and sling, lift hook block to tool box for carrying purposes.

Unusual Operating Conditions

Special problems in maintenance and operation are caused by unusual conditions such as extremes in heat, cold, humidity, high altitude, salt water and dusty or sandy work sites. When operating under such conditions, special precautions must be taken to prevent vehicle damage, minimize wear and avoid component deterioration.

Extreme Cold

In periods of extreme cold, problems of freeze damage, adequate lubrication and battery failure may become particularly troublesome. With the onset of very cold weather, it is advisable to "winterize" the LRT 110 Crane by servicing the cooling system and switching to the lubricant recommended for cold weather usage. Follow recommendations in this manual when operating the LRT 110 Crane under very extreme conditions.

1. Prevent freeze damage. To prevent freeze damage to the cooling system and cracking of engine block or head, drain and flush cooling system. Clean radiator exterior, making certain all air passages through core and cooling fins are free of foreign matter.

CAUTION

Never use a chromate-base corrosion inhibitor when coolant contains ethylene glycol. Use only nonchromate-base inhibitors. Chromate-base inhibitors reacting with ethylene glycol can produce chromium hydroxide, commonly known as "green slime." This substance reduces the heat transfer rate and can cause serious engine overheating.

Refill cooling system. Add an antifreeze solution as recommended in the amount and strength appropriate to anticipated temperatures. A corrosion inhibitor is recommended.

Inspect clamps, radiator hoses and radiator. Replace or repair any cooling system component found to be defective.

Condensation in fuel tank contaminates the fuel supply with water. This can freeze in fuel lines and block fuel flow to engine. To minimize this possibility, keep tank as full as possible during cold weather. This may entail refilling tank more frequently than usual, but the inconvenience is small compared to clearing a blocked fuel line.

2. Check and drain the fuel/water separator. If water is found in fuel tank, drain tank and refill it with uncontaminated fuel.

3. Lubricate with correct lubricants. For temperatures below -10 degrees F (-23 degrees C), service the LRT 110 Crane with Arctic diesel fuel in fuel tank and Arctic lubricating oil MIL-L-46167 in the engine. To aid cold weather start below O degrees F (-18 degrees C), service hydraulic system and transmission with Arctic lubricating oil MIL-L-46167 (refer to Lubrication chart, Appendix B).

CAUTION

Water added to battery can freeze before it mixes with electrolyte. During very cold weather, add water to battery just prior to, or during operation of, vehicle. If vehicle is not to be run, connect an external charger to battery if adding water.

4. Battery care is needed. The battery is more likely to sustain freeze damage if not kept fully charged. Its electrolyte will freeze at a higher temperature than a fully charged battery. Be certain battery is charging when engine is running. Use an external charger to restore full charge when the vehicle is not being operated.

   The battery can discharge if snow or ice short circuits the terminals. Keep battery posts and cable connectors clean and dry. Remove any corrosion with a solution of baking soda and water.

   During extremely cold weather, when the vehicle is to remain idle overnight or for any extended period, it is advisable to remove and store battery in a heated area.

   For cold start at -25 degrees F (-32 degrees C), the batteries have sufficient charge for only one start attempt.

5. Idle vehicles must be properly stored (refer to maintenance). At the end of work period, or whenever vehicle is to be left idle for extended periods, park it on a wood, concrete, asphalt or mat surface. This will prevent it from being frozen to the ground.

6. For cold weather starting, use the cold start device.

⚠ WARNING

Starting fluid is toxic and highly flammable. Container is pressurized to act as an expellent. Do not heat container and do not discharge starting fluid in confined areas or near an open flame. Failure to follow this procedure could cause SEVERE INJURY.

It is recommended that the cold start device be used for starting the LRT 110 Crane in ambient temperatures below 32 degrees F (O degrees C) and required at temperatures of 10 degrees F (- 12 degrees C) and below.

To install cold start cylinder:

a. Remove cylinder from tool box and remove cap from top of cylinder (Figure 4-57).

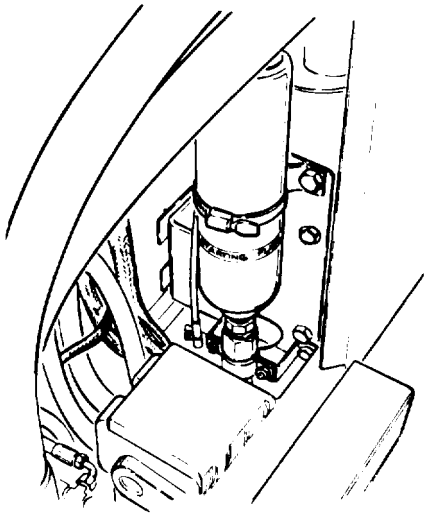

Figure 4-57. *Cold Start Cylinder*

b. Remove protector cap from valve or, if empty cylinder is in place, loosen clamp and unscrew cylinder.

c. Invert cylinder and thread into cold start mounting valve.

d. Secure cylinder with clamp.

Before starting engine using the cold start device, be sure to inspect engine oil and transmission oil filters for bulges and ruptures. The applicable Preventive Maintenance Checks and Services are also to be completed (refer to page 4-13).

If temperature is below O degrees F (- 18 degrees C), briefly turn ignition switch ON to check battery voltage. If battery voltage is below 24 volts, the LRT 110 Crane will require a slave start (refer to page 4-68). Headlights are to be turned on for 3 minutes to warm the batteries, then all switches and accessories are to be turned off.

To use the cold start device:

a. Pull cold start knob out and wait 3 to 5 seconds for ether to fill charging valve. (Omit this step if temperature is above O degrees F [- 18 degrees C]).

b. Push cold start knob in and wait 3 to 5 seconds for ether to spray into intake manifold. (Omit this step if temperature is above 0 degrees F [-18 degrees C]).

c. Repeat steps a and b. (Omit this step if temperature is above O degrees F [- 18 degrees C]).

CAUTION

Do not crank engine for periods longer than 30 seconds if tachometer indicates less than 250 rpm and no longer than 1 minute if tachometer indicates over 250 rpm. Failure to follow this procedure could cause damage to equipment.

d. Pull cold start knob out and wait 3 to 5 seconds. Turn ignition switch ON and press start button. Then push cold start knob in while holding start button. Hold accelerator pedal all the way down while cranking engine.

e. Pull cold start knob out and wait 3 to 5 seconds for ether to fill charging valve.

f. Push cold start knob in and wait 3 to 5 seconds for ether to spray into intake manifold.

g. Inject additional ether as necessary to attain and then maintain a minimum of 500 rpm.

h. Continue to hold start button until tachometer indicates 500 rpm or 1 minute of time is reached.

i. Check oil pressure gauge for 10 psi (69 kPa), or higher at idle 720 to 880 rpm.

j. Operate engine at 1,000 to 1,500 rpm, until engine temperature reaches 120 to 140 degrees F (49 to 60 degrees C).

NOTE

Minor oil leakage of filters is normal and can be as much as 3 tablespoons per minute for the first 5 minutes of operation.

k. Inspect engine oil filter and transmission oil filter for leaks. There should be no leaks present after 5 minutes of operation. Close engine hood.

l. Attempt to move the LRT 110 Crane forward and backward to check for frozen brakes and tires.

m. Check brakes and steering functions before exceeding 5 mph (8 km/h).

ALLOW THE ENGINE TO WARMUP so that optimum engine power is obtained at low speed for the protection of the hydraulic system.

7. Special attention must be given to the hydraulic oil.

CAUTION

BE ALERT FOR SIGNS OF PUMP CAVITATION. The hydraulic oil provides lubrication for pumps. When too heavy or stiff, it will not flow fast enough to meet pump demand and a vacuum or “cavitation” will be created. A “screaming” noise indicates inadequate pump lubrication, and, if allowed to continue for more than a short period, will result in serious damage to pumps.

If cavitation noise is noticed, hydraulic oil must be warmed. To do this, actuate a function, allow the cylinders involved to reach the limits of their travel and hold control in engaged position for 10 minutes. When running hydraulic oil over relief to warm it, be sure to restrict flow by turning engine at as slow a speed as possible.

Increase engine speed gradually, allowing sufficient time for oil to run through the system before commencing operation. If cavitation noise is still noticed, repeat the procedure listed above. Refer to the lubrication chart, Appendix B, for recommended oil viscosity for the winter season.

8. Slave start engine when necessary. Maintain batteries at full 24-volt charge. The slave receptacle on side of battery compartment may be used for charging batteries or slave starting engine from an external power source (Figure 4-58).

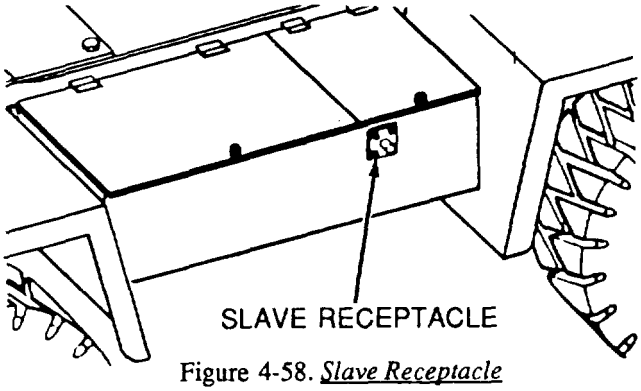

Figure 4-58. *Slave Receptacle*

If slave starting, make sure when connecting slave start cables that ignition switch is OFF, transmission is in neutral and parking brake is applied.

Connect external power source cable plug to slave receptacle. The LRT 110 Crane is a 24-volt negative ground system.

CAUTION

Do not crank engine for periods longer than 30 seconds if tachometer indicates less than 250 rpm, and no longer than 1 minute if tachometer indictes over 250 rpm. Failure to follow this procedure could cause damage to equipment.

Turn ignition switch ON and engage starter until engine starts.

After starting, allow engine speed to return to idle for engine warm-up and remove slave power cable connection.

9. Cold weather shutdown procedure. Park the LRT 110 Crane on prepared surface, if possible, free of snow, ice and water, to prevent tires from freezing to surface. Be sure slave receptacle is accessible. Remove all ice and/or snow accumulations from the vehicle and proceed as follows:

   a. Turn off all accessories, i.e., heater, fan, etc.

   b. Check transmission fluid level.

   c. Check voltmeter. If voltmeter reads below 24 volts, indicating insufficient charge in battery for unassisted start, notify organizational maintenance.

   d. Perform vehicle shutdown (refer to page 4-71).

   e. Drain water from fuel separator by opening drain valve and pumping handle on lift pump. Close drain valve when procedure is completed.

f. Restart engine and check to insure all controls are properly positioned for starting. Run engine for 3 to 5 minutes to charge battery.

g. Turn ignition switch OFF and service vehicle.

Emergency Window Removal

If it is necessary to rescue an operator that is trapped in the cab, remove the front glass. Using any available pointed object such as a knife, screwdriver or stick, pry out the seal lip of the weatherstripping. Pry in under the glass to raise it so that it can be removed. This same method can be used on any of the side or rear windows for emergency purposes.

An able and conscious operator can also exit the cab by placing his feet against the glass and with moderate force, push the glass out of front or rear windows.

Extreme Heat

Like extreme cold, extreme heat requires that precautions be taken with respect to the cooling system, battery and lubrication. Protect the vehicle by performing the following recommended procedures:

1. Lubricate with correct lubricants. High temperatures necessitate the use of lubricants which are both higher in viscosity and resist deterioration at higher operating temperatures. Refer to the Lubrication section, Appendix B and use the lubricants recommended for the expected temperatures.

   Crankcase oil is particularly important because it helps dissipate heat. Check the oil level frequently and add oil as required to maintain the correct level. Low oil will hinder heat dissipation.

   WARNING

   The cooling system is pressurized. Use extreme caution and proper protection when removing radiator cap after operating temperature is reached. When removing cap, loosen it slowly to the left, then pause a moment. Steam and hot gases will be escaping through the radiator cap; avoid being burned by these gases. Continue to turn cap until it can be removed. Failure to follow this procedure could cause SERIOUS INJURY.

2. Prevent overheating. To insure proper coolant circulation, drain and flush the cooling system. Clean any foreign matter from the radiator cooling fins and core air passages. Replace defective hoses and tighten hose clamps. Eliminate any leaks detected and fill the system with a 5070 solution of ethylene glycol and water. A corrosion inhibitor is also recommended.

   Engine overheating due to loss of coolant will most often be corrected by SLOWLY replacing the lost coolant with engine idling.

   Water containing larger than normal concentrations of salt or minerals should not be used in the cooling system. Salt will cause corrosion and mineral deposits will collect on the coolant passage walls. Both processes inhibit proper cooling.

3. Check the battery. Increased evaporation rates will cause the battery electrolyte level to fall more rapidly during very hot weather. Check the level frequently and add distilled water as required to maintain the proper level.

4. Keep air circulation free. Air circulation around the engine and battery must not be restricted. Keep air intake and exhaust openings clear of leaves, paper and other foreign matter which may restrict air flow.

   Keep the engine clean of dirt, grease and other substances which inhibit heat dissipation.

   Use sound judgment in operating the engine. Avoid the two extremes of racing and lugging.

   Advance the throttle only enough to handle the load, yet be certain that the engine speed is high enough to maintain adequate fan speed for cooling.

   Run the engine only when engaged in work operations or when traveling the vehicle. Avoid prolonged periods at idling and shut the engine down if operations are interrupted.

Sandy or Dusty Work Sites

The presence of large amounts of sand or dust at the work site can contribute to accelerated component wear. Either substance will act as an abrasive when deposited on moving parts. The problem is combated by more frequent lubrication and by the servicing of breathers and filters at shorter intervals. Follow the recommendations below when operating in sand or dust on a regular basis:

1. Check the filler caps, filters, breathers, air cleaner and grease fittings.

   Keep sand and dust out of the hydraulic system by keeping the reservoir filler cap tight and servicing the hydraulic system filters frequently.

   The fuel system should be kept free of sand and dust by keeping the tank filler cap tight and servicing the fuel filters frequently.

   When lubricating, thoroughly clean each grease fitting before attaching the grease gun. Pump generous amounts of grease into all lubrication points, using the fresh grease to pump out the old grease. The increased frequency of lubrication and service noted above should be determined by observations made at work site. Inspection will indicate how long it takes for lubricants, breathers and filters to accumulate unacceptable amounts of sand or dust. The frequency of lubrication and service should be adjusted accordingly.

   The engine and air cleaner should also be serviced frequently to prevent sand and dust from entering the engine. The engine oil and oil filter should be changed at shorter than normal intervals to insure a clean oil supply to the engine's moving parts.

⚠ WARNING

Adequate ground bearing support must be provided for the outrigger when operating on soft surface. Be alert for signs of LRT 110 Crane movement during operations. Failure to follow this procedure could cause DEATH or serious injury.

2. Insure that the terrain is adequate to support the crane's weight.

High Humidity or Saltwater

In some locations, such as coastal areas, the LRT 110 Crane may be exposed to the deteriorating effects of salt, moisture or both. To protect exposed metallic surfaces, wiring, hoist rope, paint and other items, keep them dry and well lubricated. Follow the recommendations below when operating in these conditions:

Check for deterioration.

Make frequent inspections for rust and corrosion. Remove them as soon as they are detected. Dry and paint exposed surfaces after rust and corrosion have been removed.

Where paint may not be applied, such as on polished or machined surfaces, coat the area with grease to repel water.

Keep bearings and their surrounding surfaces well lubricated to prevent the entry of water.

Cable must be kept well lubricated to prevent moisture and salt from penetrating the cable strands.

Fording

There are no special preparation or maintenance vehicle requirements to ford up to 30 in, (762 mm) of water.

Section VII
Shutdown

Vehicle Shutdown Procedures

Before securing the LRT 110 Crane, make sure of the following:

1. Fully retract boom and center it over the front of the LRT 110 Crane.

CAUTION

When attaching hook block to hook block tieback, take up cable slowly while lowering boom to prevent damage to windshield.

2. Secure hook block to hook block tieback.
3. Lower boom to travel position.
4. Make certain all outriggers are in the up position.
5. Place transmission shift lever in neutral.
6. Apply parking brake.
7. Turn ignition switch OFF.

Section VIII
Transportability

As required by the procurement specification, provisions are included on the LRT 110 Crane for highway, air, marine and rail transportation. Figure 4-60 illustrates the weight distribution and location of slinging eyes, tiedown lugs and towing lugs.

Land Transport

The LRT 110 Crane may be driven on public roads (refer to Vehicular Operation, page 4-18), Normal transport over highways should be accomplished by hauling on a flatbed truck or trailer.

LRT 110 Crane Towing Procedure for Emergency Recovery Only

This towing procedure is to be used for emergency recovery only, such as a dead engine or any other breakdown unabling the LRT 110 crane to be moved under its own power. Refer to page 4-56 of this manual for "Emergency Load Lowering" to return the LRT 110 Crane to a travel mode for towing purposes. Do not tow the LRT 110 Crane in any convoy or troop movement by this procedure. For convoy or troop movement, transport on a flatbed truck or trailer.

To prepare the vehicle for towing:

1. Position the boom over the front in the travel position to prevent engagement of rear axle lockout.

CAUTION

When attaching hook block to hook block tieback, take up cable slowly while lowering boom to prevent damage to windshield.

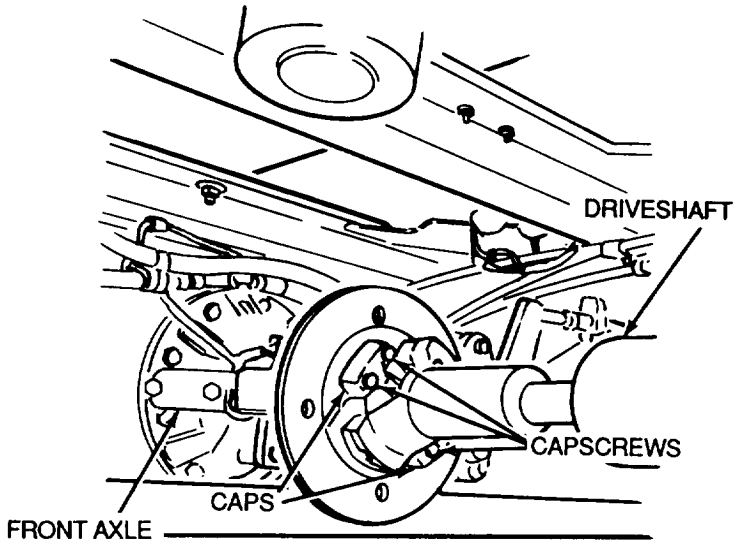

Figure 4-59. *Driveshaft*

2. Attach the hook block to the hook block tieback with enough tension to take the slack out of cable.

CAUTION

If the LRT 110 Crane is to be towed a distance of more than 1 mile (1.6 km) and/or at speeds greater than 3 mph (4.8 km/h), the front drive shaft must be disconnected from the front axle. As an alternative to disconnecting the drive shaft, if the engine is operable, the engine may be started and allowed to idle during the towing process. This will circulate lubricant in the transmission, lubricating the clutches during the towing operation. Failure to disconnect the drive shaft or to run the engine will cause internal damage to the transmission as the vehicle is towed.

3. Disconnect the drive shaft by removing four capscrews and two caps (Figure 4-59). The driveshaft must be disconnected from the front axle and secured to a frame crossmember to prevent it from contacting the rotating axle input yoke or the ground while the vehicle is being towed. The spider bearing caps must be taped or wired together to prevent them from falling off and being lost.

4. Place the two-wheel/four-wheel drive shift lever, located at the right of the operator's seat, in the two wheel drive position to prevent damage to the transmission during towing.

5. Attach tow bar to the lugs on the outrigger and to towing vehicle.

6. Release the parking brake in the operator's cab by pulling the lever up to release it. If the vehicle's electrical power is available, turn on the emergency four-way flashers.

   The crane may now be towed at speeds up to 20 mph (32 km/h) (depending on existing conditions) for whatever distance is necessary. When making turns, make them as wide as possible (no sharp turns) at no more than 5 mph (8 km/h).

CAUTION

The tow bar MS500048 is the only tow bar to be used on this vehicle. If not available, see organizational maintenance. Failure to follow this procedure could cause damage to equipment.

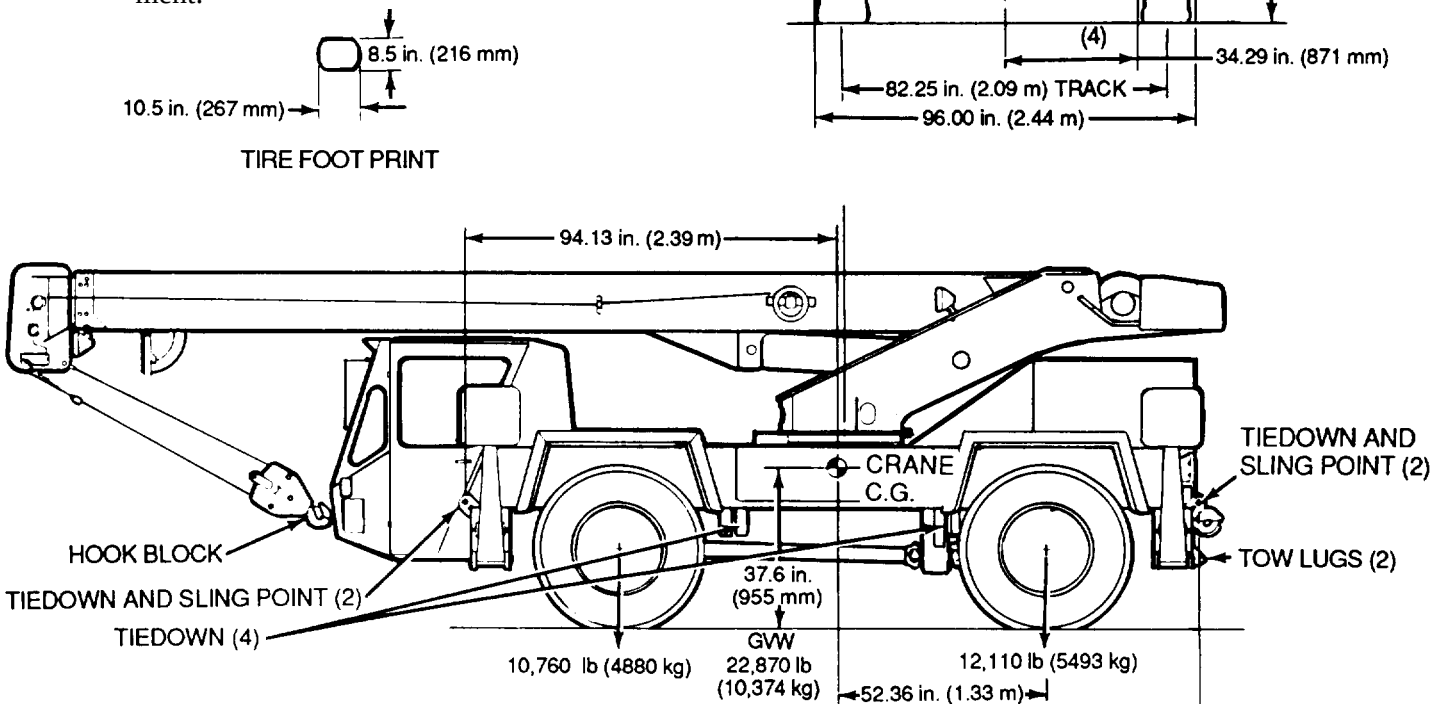

Figure 4-60. *Preperation for Travel*

Air Transport

The overall height of the LRT 110 Crane allows for transport without disassembly by C-5, C- 141, and C-130 aircraft. Prepare the LRT 110 Crane as follows:

1. Retract the boom and lower it over the rear of the carrier (Figure 4-61).

CAUTION

Apply only enough tension to the cable to take up the slack. Failure to follow this procedure could cause damage to equipment.

2. Use the link in the tool box to connect the hook block to the pintle hook on the rear outrigger. With the winch, take up the slack in the cable.

3. Refer to TM55-3810-165-14. Transportability Guidance for the Crane. 7.5 Ton. Rough Terrain. Koehring. Type 1, {NSN 3810-01-165-0646}, Type 2, {NSN 3810-01-165-0467} and the shipping data plates for tiedown requirements.

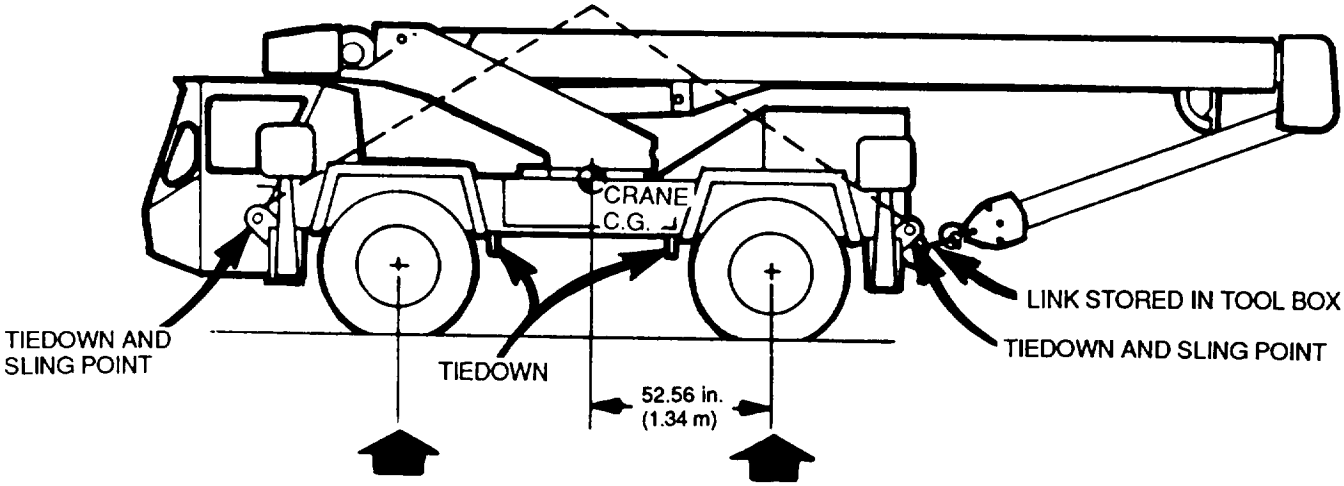

OVERALL LENGTH 342 in. (8.69 m)
OVERALL HEIGHT 93 in. (2.36 m)

SHIPPING CUBAGE 1767 cu. ft (50.04 cu. m)
OVERALL WIDTH 96 in. (2.44 m)

Figure 4-61. *Air Transport Tiedowns*

Rail Transport

WARNING

Weight of hook block is approximately 235 lb (107 kg). Use adequate lifting equipment and always properly support hook block. Do not lift over personnel or let personnel walk underneath suspended load. Failure to follow this procedure could cause DEATH or serious injury.

1. Using hoist and sling, remove the hook block from the cable. Store it in the tool box and block it to prevent it from moving.

2. Retract the boom and lower it over the front. Wind the cable back on the winch drum, and wire the socket down to prevent the cable from loosening on the winch drum.

3. Install a 1/2 in. 6x19 IWRC cable around the load sheave and the hook block tieback.

4. Refer to TM55-3810-01-165-14, Transportability Guidance for the Crane. 7.5 Ton, Rough Terrain, Koehring, Type 1, {NSN 3810-01-165-0646}, Type 2 {NSN 3810-01-165-0467} and the shipping data plates for tiedown requirements.

5. Place the fuel shut-off on the rear wall of the cab in the off position. Put the transmission shift lever in the center (neutral) position, and release the parking brake.

6. Remove all loose tools and equipment from the operators cab. Stow and secure all tools and equipment in the tool box.

7. Band the tool and battery box lids shut.

Transport For LRT 110 Crane

For loading aboard ship, the LRT 110 Crane may be slung in a horizontal attitude from the lifting eyes on the ends of the outrigger boxes. Figure 4-66 shows the slinging geometry, indicating the sling apex of the vehicle's center of gravity. If provisions exist, the LRT 110 Crane may be driven aboard the ship in a forward or backward direction. Once aboard, the LRT 110 Crane may be maneuvered into tight quarters by using the crab steering capability. Tie down the vehicle as required using the tiedown lugs provided.

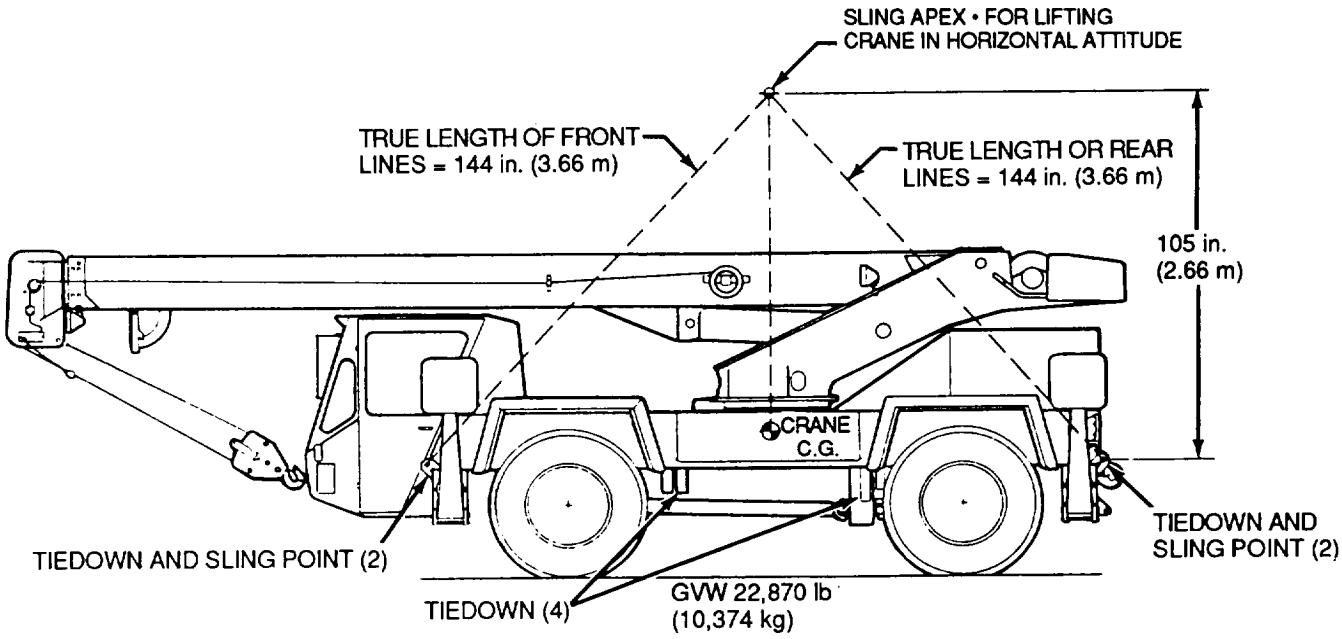

Figure 4-66. *Marine Transport*

CHAPTER 5
TYPE II SUPPLEMENT

Section	Title	Page
	Sectionalization	
	Preparation for and Sectionalization of the LRT 110 Type II Crane for External Air Transport (EAT)	5-2
	Preparation for and Assembly of Sectionalized LRT 110 Type II Crane After External Air Transport (EAT)	5-26
	Transportability	
	Land Transport	5-46
	Air Transport	5-48
	Rail Transport	5-49
	Marine Transport	5-50
	Helicopter Transport	5-50

Section I
Sectionalization

The LRT 110 Type II Crane is equipped with a sectionalization kit complete with all components and tools necessary to disassemble it into two separate loads for transport, and reassemble it on another site. All of the sectionalization components are stored on the LRT 110 Crane with pinned connections in storage locations A thru E (Figure 5-l). All tools, extension hoses and accessories required are stowed in carrier tool box on left side of vehicle.

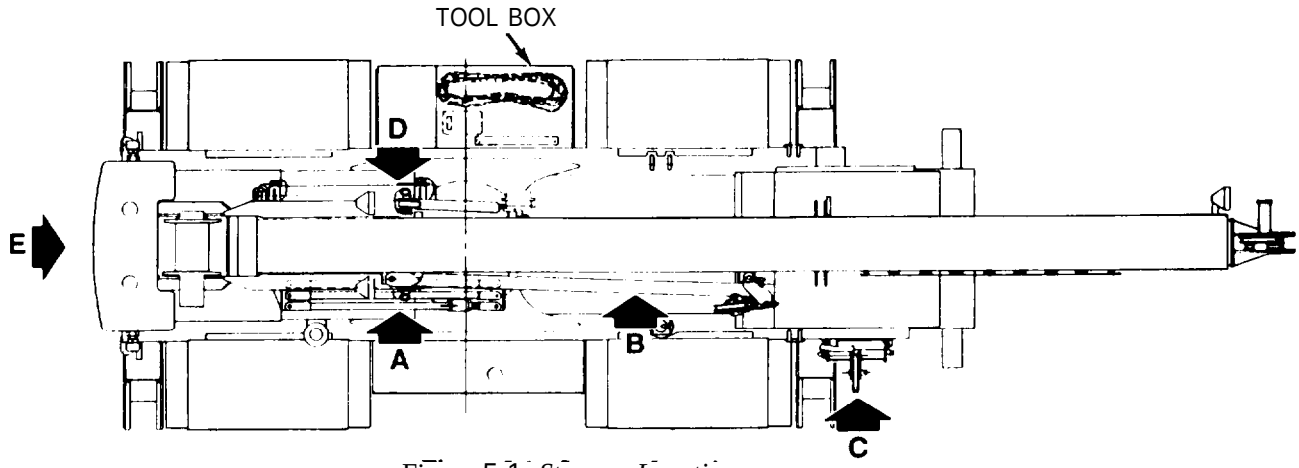

Figure 5-1. *Storage Locations*

Preparation for and Sectionalization of the LRT 110 Type II Crane for External Air Transport (EAT).

Preparation for Separating Upperstructure from Carrier

The LRT 110 Crane should be positioned on a suitable unobstructed location for disassembly procedure.

WARNING

Vehicle must be level to prevent possible loss of control of upperstructure when lifting off of carrier. DEATH or serious injury may result if upperstructure gets out of control.

1. Start engine and with boom lowered over cab, retracted and in travel position, proceed as follows:

a. Set outriggers by extending beams and lowering outrigger pads to the ground. Lift the LRT 110 Crane off ground and level it, using bubble level on right side of console.

CAUTION

When removing hook block from storage bracket, pay out cable while raising boom to prevent damage to windshield.

b. Raise boom to a 50-degree elevation, keeping hook block in vertical position. Unhook hook block from storage bracket. Lower boom to horizontal position while raising hook block.

c. Shut engine off.

2. Remove anti-two block counterweight (Figure 5-2) as follows:

a. Using 6 mm hex allen wrench, open and split the anti-two block counterweight hanging down from boom tip around hoist cable.

b. Separate and remove counterweight halves from cable. Using capscrews, reassemble counterweight halves after removal.

c. Remove counterweight from anti-two block switch by removing thumbscrew from clevis holding chain to anti-two block switch.

d. Remove counterweight and chain. Stow in tool box. Reinstall clevis on anti-two block switch with thumbscrew.

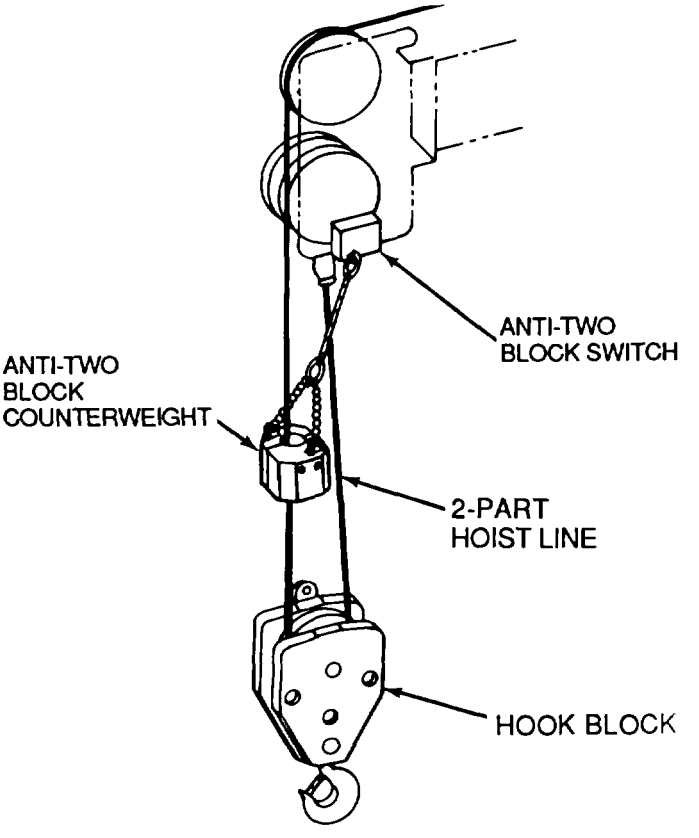

Figure **5-2.** *Anti-Two Block Counterweight, Switch and Hook Block*

WARNING

Observe length of cable end protruding from cable socket and clamp. If cable end extends more than 2 in. (51 mm), adjust cable so no more than 2 in. (51 mm) protrude. Excessive cable protrusion can push cable out of socket when hook block is hoisted with plate to boom head. Failure to follow this procedure could cause DEATH or serious injury.

NOTE

When counterweight has been removed from anti-block switch, the switch is shut off and LRT 110 Crane control disconnect system has been deactivated. Functions of raising winch, and extending and lowering boom will not operate. To use any of these functions for the following procedures, turn on anti-two block BY-PASS switch. This is to be done only as required.

3. Prepare to raise hook block up to boom head by removing plate (1, Figure 5-3) from tool box and place over dead end bracket on top of hook block. The LRT 110 Crane should be reeved with a two-part line for this procedure.

4. Start engine and swing upperstructure and boom around to right side of carrier to 2 o'clock position.

5. Shut engine off.

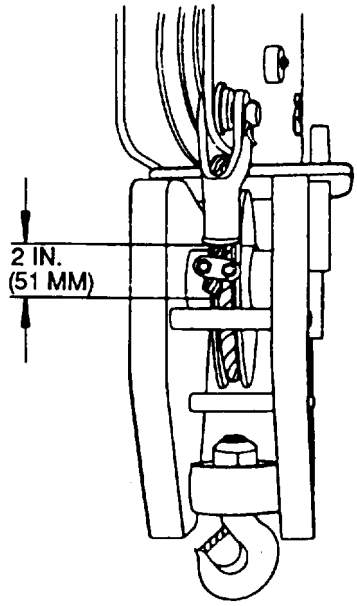

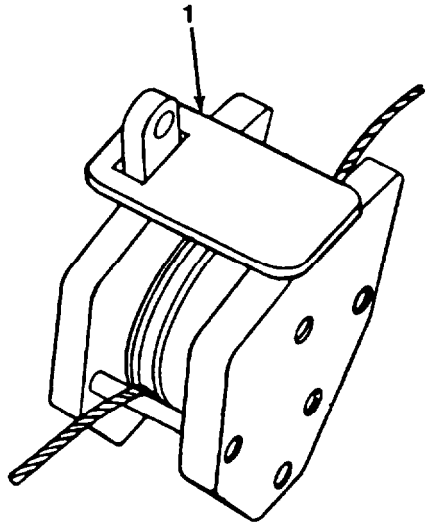

Figure 5-3. *Preparation for Raising the Hook Block*

WARNING

Weight of mast is approximately 98 lb (44 kg). Use two people to properly support and lift mast. Failure to follow this procedure could cause DEATH or serious injury.

6. Remove two pins (2) and mast (3) from storage location D (Figure 5-4) on left side of upperstructure. Lay mast (3) on carrier deck for future assembly and store two pins (2) in tool box for future use.

7. Start engine. Swing upperstructure to left side of the LRT 110 Crane to an approximate 10 o'clock position.

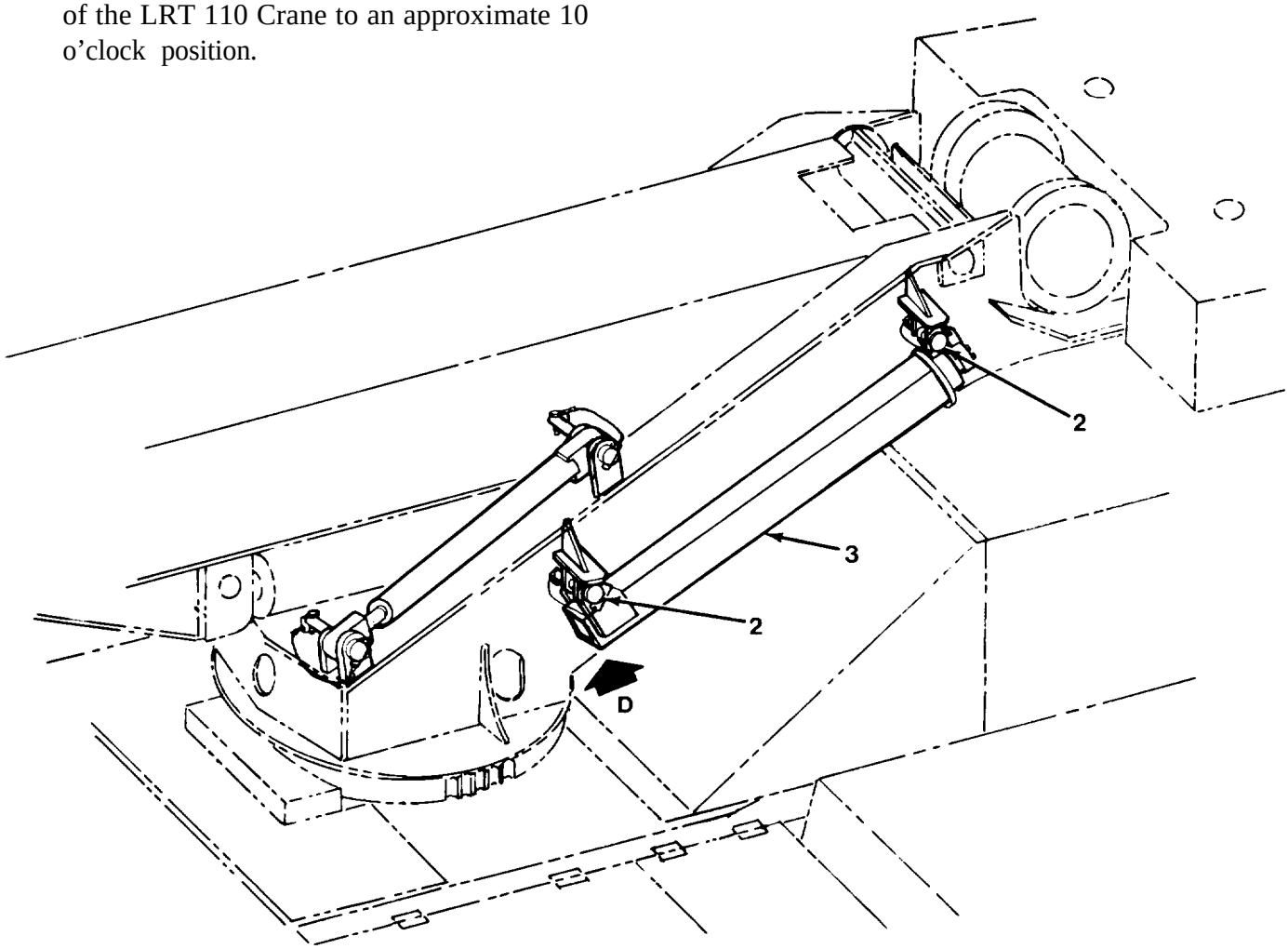

Figure 54. *Storage Location* D

8. Lower hook block to ground, positioning it on its side (Figure 5-5). Maintain tension on cable and continue to pay out 3 ft (914 mm) of cable. Insert wedge block between winch cable and winch brace at counterweight side (Figure 5-6).

9. Shut engine off.

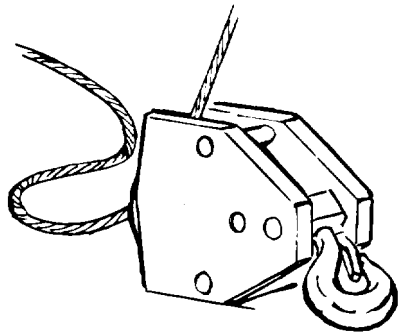

Figure 5-5. *Hook Block*

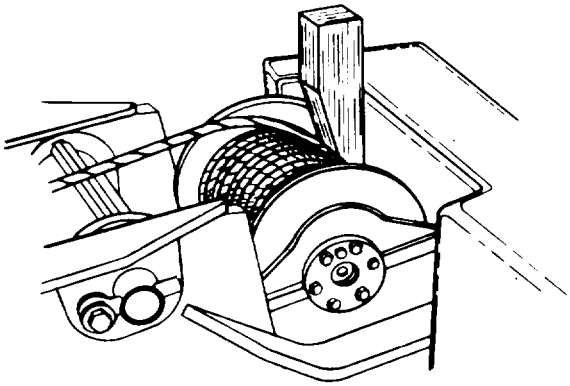

Figure 5-6. *Wedge Block in Winch Drum*

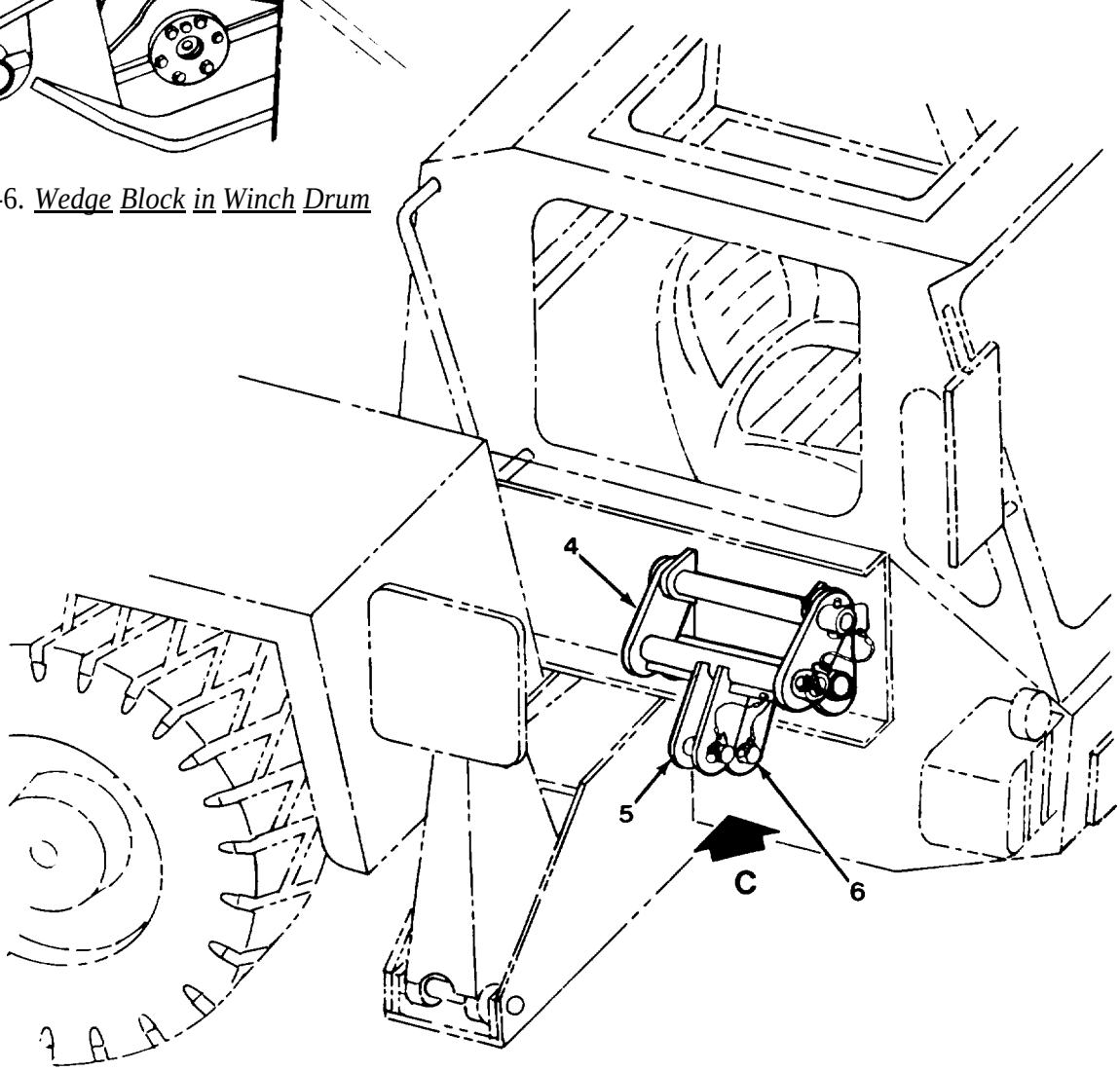

Figure 5-7. *Storage Location C*

10. Install toggle sheave brackets on top of boom as follows:

    a. Remove two right side attaching links (4) and toggle sheave brackets (5) from storage location C (Figure 5-7) on right front side of carrier frame.

    b. Remove two sheave pins (6) from toggle sheave brackets (5).

    c. Attach two toggle sheave brackets (5) and attaching links (4, Figure 5-8) to studs on top of boom. The cable should lay over two toggle sheave brackets (5), between ears. Secure two attaching links (4) and toggle sheave brackets (5) with two lynch pins (7) tethered to attaching links (4).

    d. Remove two sheaves (8) from tool box and install on toggle sheave brackets (5) with sheave pins (6). Make sure hex head of sheave pin (6) is aligned with key stock on toggle sheave bracket (5).

CAUTION

With anti-two block safety feature not functional, do not apply excessive line pull to cable. This can cause serious damage to cable, hook block, boom head and winch.

    e. Start engine. Hold on anti-two block BY-PASS switch (Figure 5-9).

    f. Maintain tension on cable and remove wedge block from winch drum. Using winch control lever, pull hook block and plate up to and in contact with boom head. Stop as soon as contact is made.

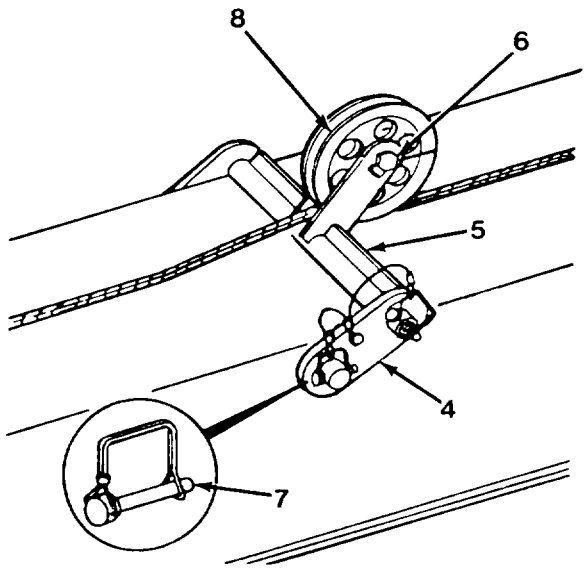

Figure 5-8. *Installing Sheaves*

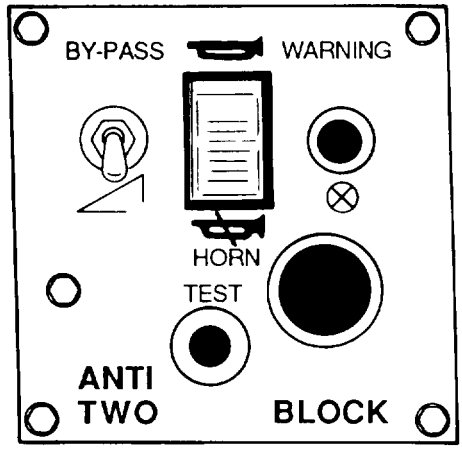

Figure 5-9. *Anti-Two Block Panel*

11. Shut engine off.

⚠ WARNING

Be aware of limited work area while lifting, reaching and assembling the mast and lift arm. The deck and fender surface is small and can become slippery in inclement weather. Failure to follow this procedure could cause DEATH or serious injury.

12. Install mast (3) on carrier as follows:

a. With the aid of another person, raise mast (3) from deck, and lower it over square pivot bearing (9, Figure 5-10), located on right side of frame, behind operator's cab. Position stop on mast (3) towards center line of vehicle between stops. Mast base ears should be over fender. Align ears on top of mast with support ears on frame.

b. Remove two truss rods (10), adjustable truss rod (11) and six pins (12) from storage location A (Figure 5:11) on right side of upperstructure.

c. Install two truss rods (10) to top of carrier frame, one on left side, behind cab, and the remaining one on right side of cab. Install four pins (12, Figure 5-11 A) in connecting points.

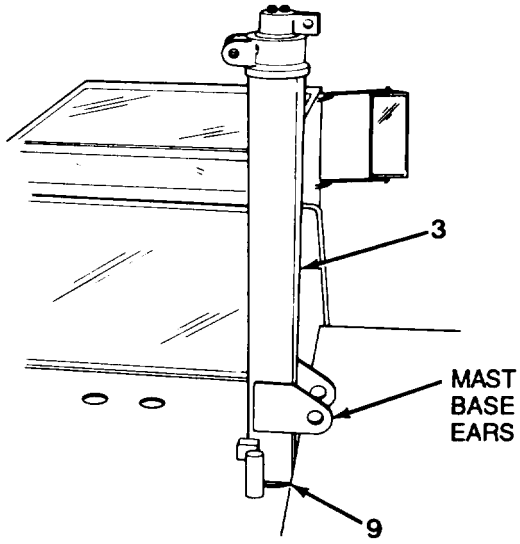

Figure 5-10. *Assembling the Mast*

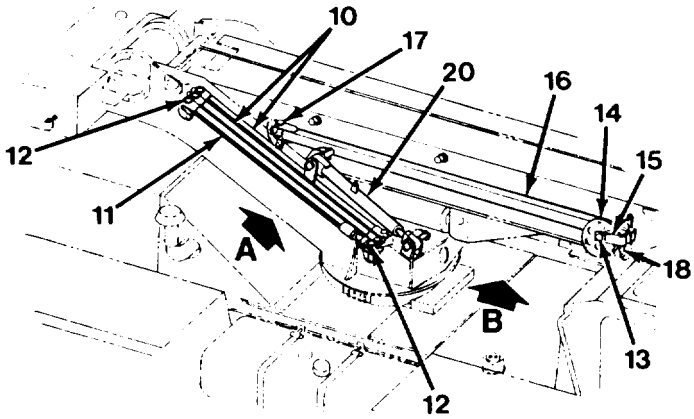

Figure 5-11. *Storage Locations A* and B

Figure 5A. *Installing the Truss Rods*

13. Install lift arm (16) as follows:

    a. With lift arm (16) still in storage location B on right side of boom, pull out sheave pin (13) and remove sheave (14) from sheave bracket (15, Figure 5-11).

    b. Temporarily lay sheave (14) aside.

WARNING

Weight of the lift arm is approximately 95 lb (43 kg). Use two people to properly support and lift the lift arm. Failure to follow this procedure could cause DEATH or serious injury.

    c. Remove lift arm (16) and pins (17) and (18) from storage brackets. Place pin (18) in tool box for future use.

    d. With sheave bracket (15) down, connect lift arm (16) to base of mast (3) with pin (17, Figure 5-12).

    e. Using two pins (12), attach adjustable truss rod (11) to top of mast (3) and top of lift arm (16). The mast and arm assembly is now complete.

    f. Temporarily swing mast and arm assembly out of the way.

14. Start engine. Raise boom until a minimum boom angle of 45 degrees is observed on boom angle indicator.

15. Shut engine off.

The crane winch is used to hoist and separate upperstructure from carrier. Extension hoses are added to winch hydraulic circuit, supplying power to winch to hoist upperstructure off carrier and lower it to ground.

The rotary manifold is located internally in center of upperstructure. Access to rotary manifold is through opening under boom and through cutout on sides of upperstructure.

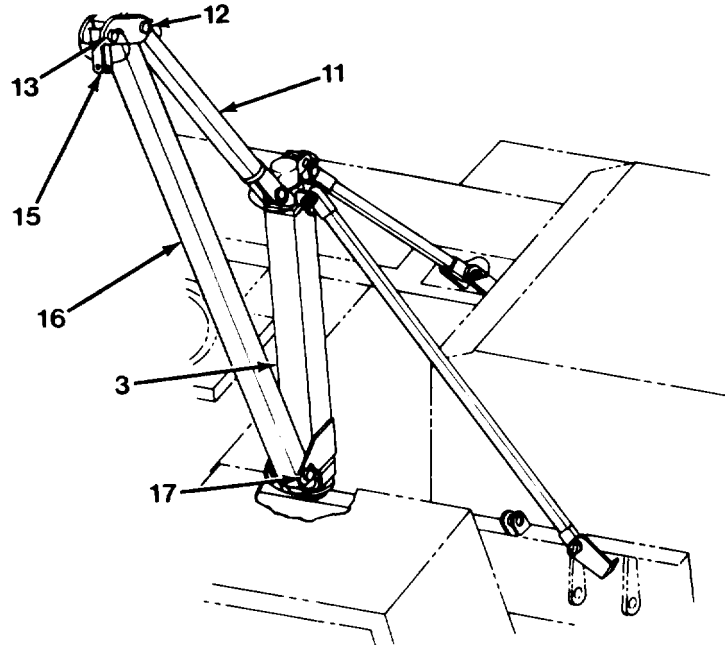

Figure 5-12. *Assembling the Mast*

16. Prepare crane winch for hoisting as follows:

WARNING

Never disconnect hydraulic lines or fittings before venting pressure. Turn dipstick 1/4 turn to safety notch to relieve pressure. Failure to follow this procedure could cause SERIOUS INJURY.

a. Turn dipstick 1/4 turn to safety notch to relieve pressure.

b. Disconnect two winch hoses, tagged H-10 and H-11 (Figure 5-13), attached to rotary manifold with quick disconnect fittings. These hoses come down from winch on right side of upperstructure and run in through hole to rotary manifold. Reach in and release attaching disconnects on these hoses.

c. Remove two coiled extension hoses (Figure 5-14) from tool box. Their ends are connected together by quick disconnects, and are marked with ID tags reading H-10 and H-11. Take them to right side of vehicle.

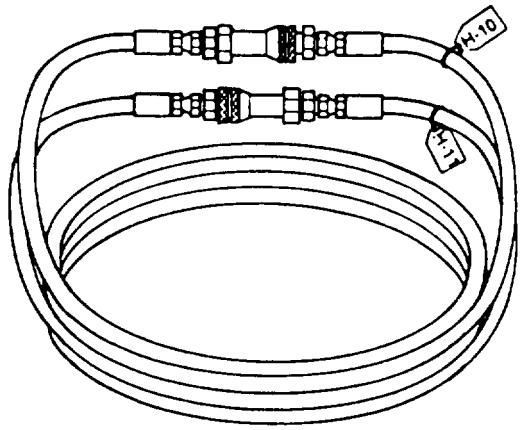

Figure 5-14. *Extension Hoses*

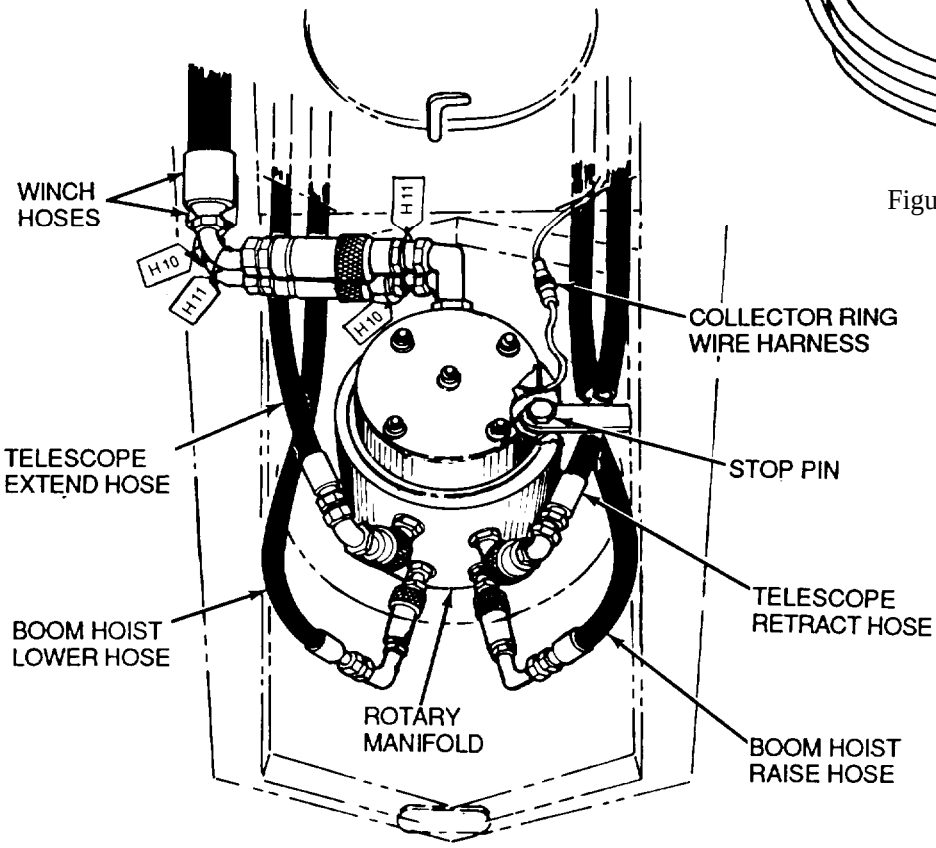

Figure 5-13. *Rotary Manifold Hoses*

NOTE

Be sure to keep the hoses and their quick disconnect ends clean during this procedure.

d. Disconnect ends and uncoil hoses.

e. Locate the two quick disconnect fittings that extend down from two tees on winch valve next to frame, underneath right side of earner. Remove protective dust caps and connect male connectors of extension hose H-10 to H- 10 winch hose and extension hose H-11 to H-11 winch hose (Figure5-15).

f. Connect loose ends of H- 10 and H- 11 extension hoses to respective tagged fittings. The winch hoses are now attached from valve to original winch hoses with these extensions.

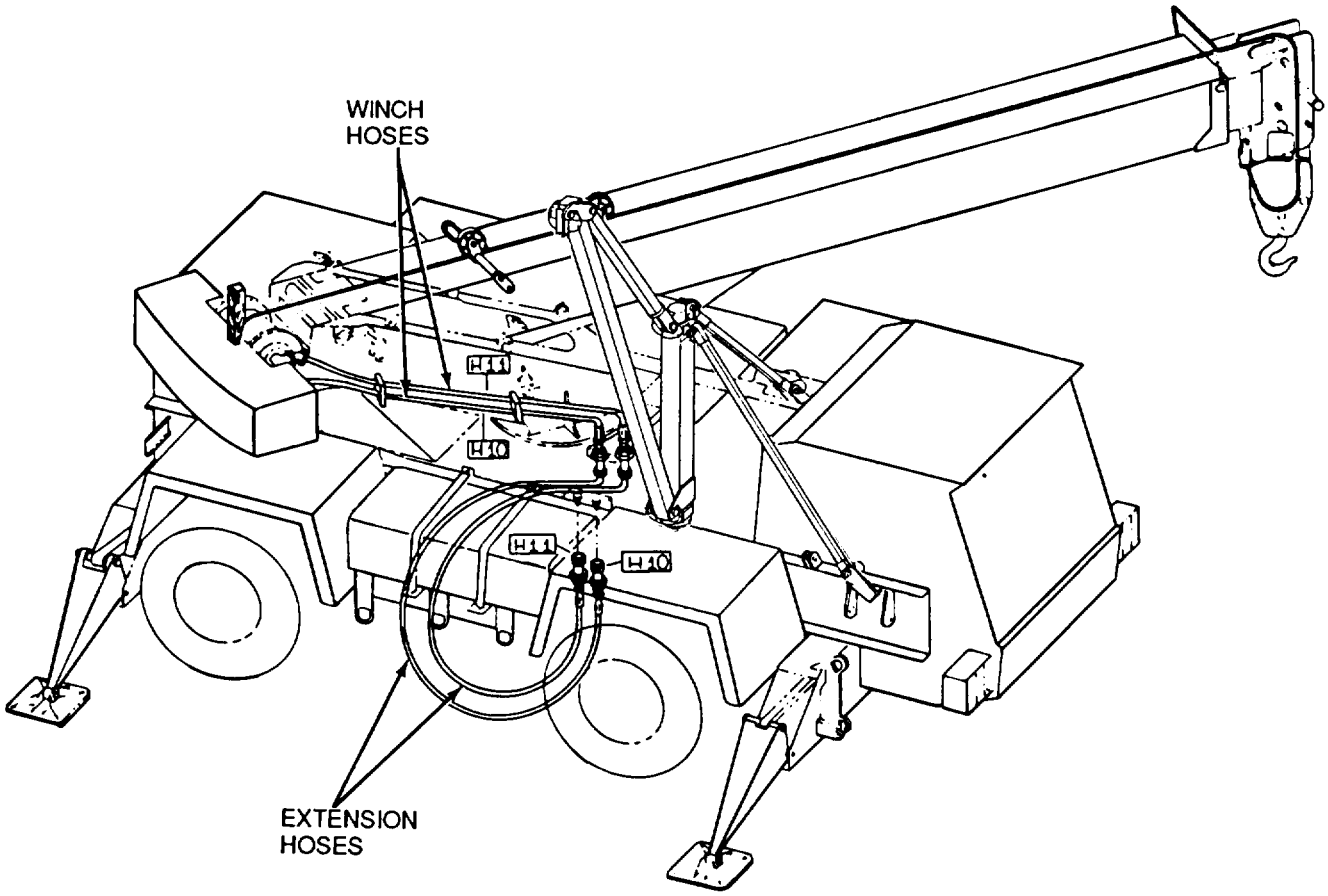

Figure 5-15. *Quick Disconnect Fittings*

CAUTION

DO NOT use a torque wrench for removal purposes. Failure to follow this procedure could cause damage to equipment.

17. Remove 10 upperstructure mounting capscrews and 20 washers from inside upperstructure, by using a 36 mm socket, two adapters, torque multiplier, short and long extensions, breaker bar, and extension bar (Figure 5-16). All these tools are found in tool box (refer to Tools for Sectionalization, page 5-45). Set mounting capscrews and washers aside where they will not be kicked off deck, as they will be reinstalled shortly.

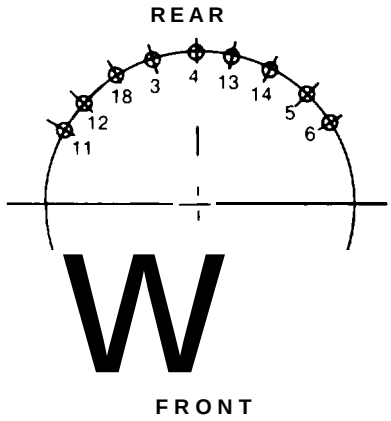

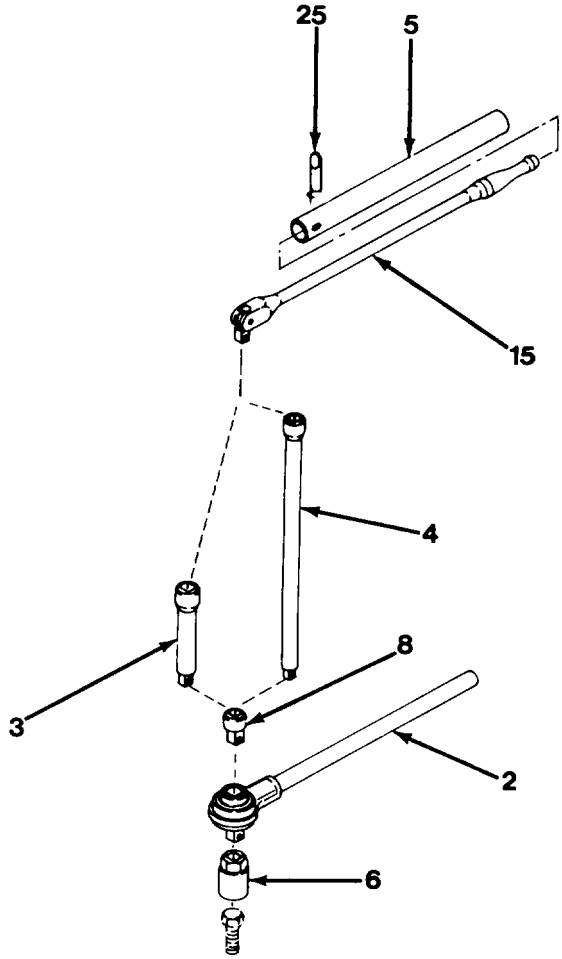

Location Ref	TOOLS REQUIRED BY TOOL NUMBER (REFER TO PAGE 5-45)							
1	6	2	8	4	15	25	5	
2	6	2	8	4	15	25	5	
3	6	3	2	8	4	15	25	5
4	6	2	8	4	15	25	5	
13	6	3	2	8	4	15	25	5
14	6	3	2	8	4	15	25	5
15	6	4	2	8	15	25	5	
16	6	2	8	4	15	25	5	
17	6	4	2	8	15	25	5	
18	6	3	2	8	4	15	25	5

Figure 5-16. *Tools Used for Removal of Mounting Capscrews*

18. With a 36 mm socket, remove stop pin and lockwasher from torque arm bracket on side of rotary manifold. Stem stop pin and lockwasher in tool box.

19. Disconnect wire harness (Figure 5-17) connected to electrical collector ring.

20. Relieve pressure in extend-retract valve circuit by turning ignition switch ON, holding on anti-two block BY-PASS switch and operating boom telescope lever in both directions several times until pressure is released. Turn ignition switch OFF and proceed as follows:

    a. Disconnect boom extend-retract hose quick disconnects from rotary manifold.

    b. Remove two plugs size 12 from tool box and plug hoses.

    c. Roll both hoses back to rear opening and hang the right extend hose over lip of opening. Hang left retract hose over right extend hose and under tab (Figure 5-18).

NOTE

Make sure that all capscrews and stop pin are removed from inside upperstructure and wire harness is disconnected from electrical collector ring.

21. Start engine. Lower hook block 12 in. (305 mm) from boom head and proceed as follows:

    a. Lower boom to horizontal position.

    b. Shut engine off.

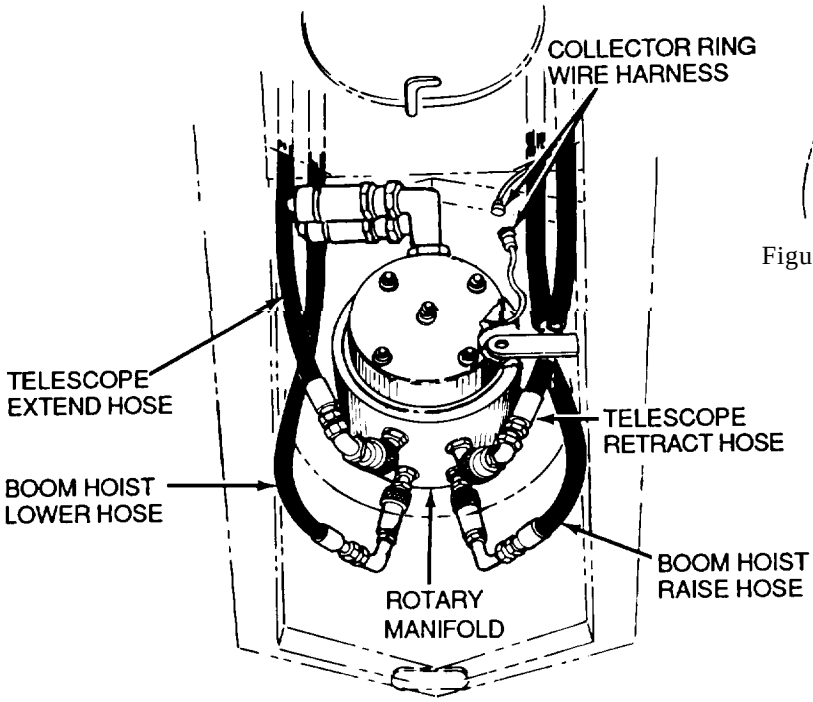

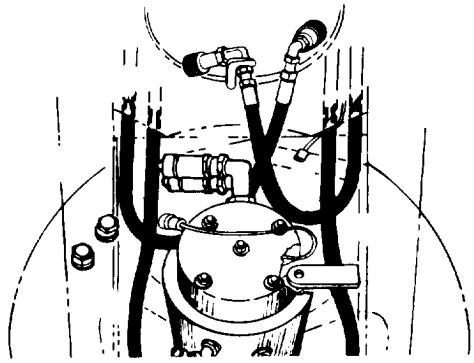

Figure 5-18. Location of Boom Extend-Retract Hoses After Disconnection

22. Relieve pressure in boom hoist circuit by turning ignition switch ON, holding on anti-two block BY-PASS switch and operating boom hoist lever in both directions several times until pressure is released. Turn ignition switch OFF and proceed as follows:

    a. Disconnect two boom hoist cylinder hoses (Figure 5-19) from manifold. Access is through cutout in front of upperstructure.

    b. After disconnecting, pull hose ends out through front hole to keep them out of the way. Remove two plugs size 10 from tool box and plug hose ends (Figure 5-20).

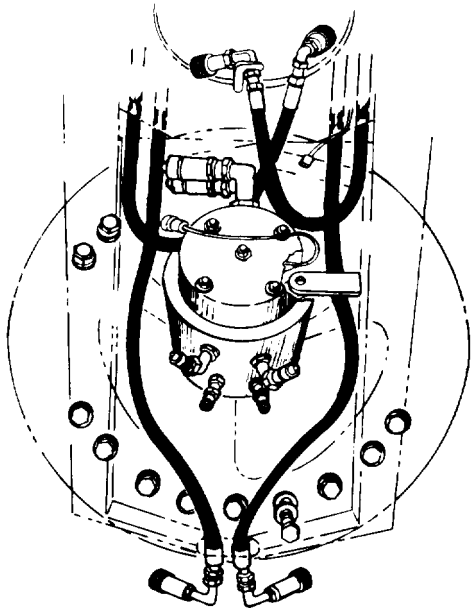

Figure 5-20 *Location of Boom Hoist Cylinder Hoses After Disconnection*

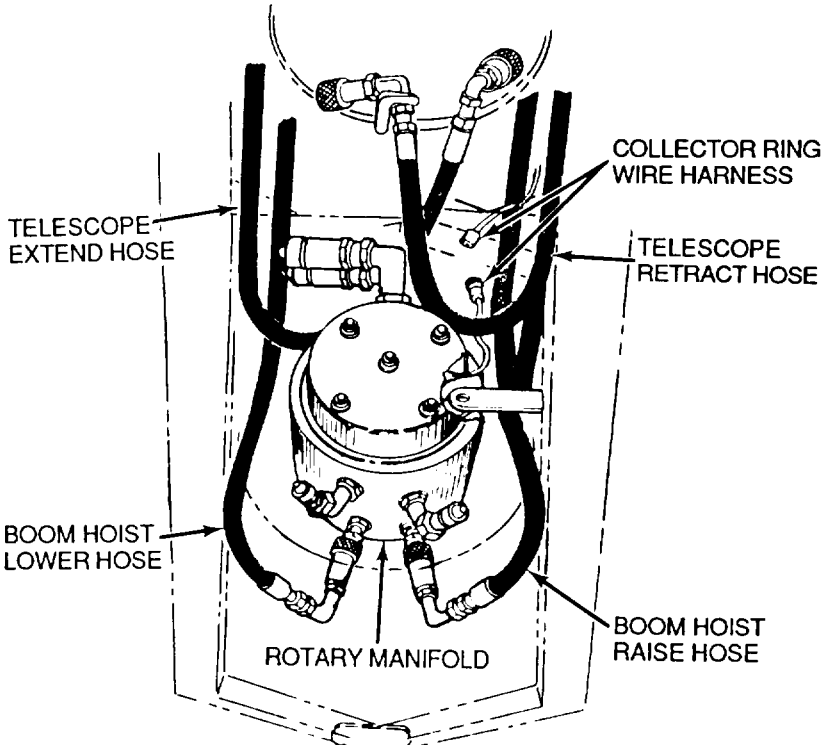

Figure 5-19 *Rotary Manifold Hoses*

Preparation for Removing Upperstructure from Carrier

1. Swing mast and lifting arm around from beside cab and position it over lifting point of boom, between toggle sheaves (Figure 5-21).

2. Start engine. Lower hook block to ground and begin paying out cable to form slack from toggle sheaves up to clevis on lift arm. Maintain tension on cable to prevent unspooling.

3. Insert wedge block between winch cable and winch brace at counterweight (Figure 5-6).

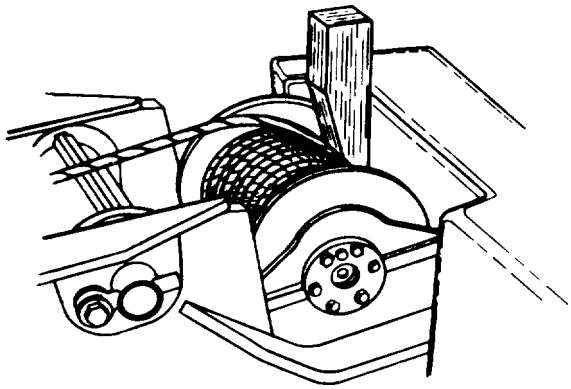

Figure 5-6 Wedge *Block in Winch Drum*

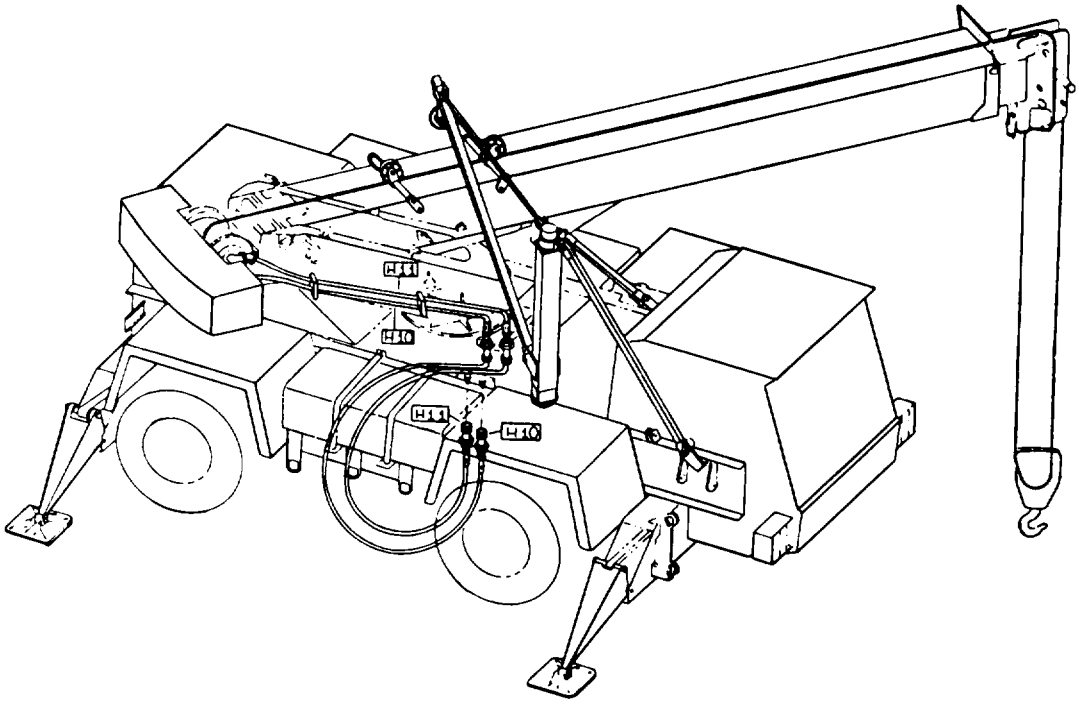

Figure 5-21 *Positioning of Mast and Lifting Arm*

4. Take loose sheave (14, Figure 5-22) that was removed from lift arm (16) in step 13.a of Preparation for Separating Upperstructure from Carrier and insert it in slack of cable.

5. Raise sheave (14) and cable up into clevis on lift arm (16) and using sheave pin (13), install sheave (14) in place in clevis.

CAUTION

Make sure three sheaves and cable are in alignment with boom. Failure to follow this procedure could cause damage to equipment.

6. Remove wedge block and raise hook block to boom head and draw cable tight. Maintain tension on cable to prevent unspooling. The tightened cable will help support boom and upperstructure while removing remaining capscrews.

7. Shut **engine off.**

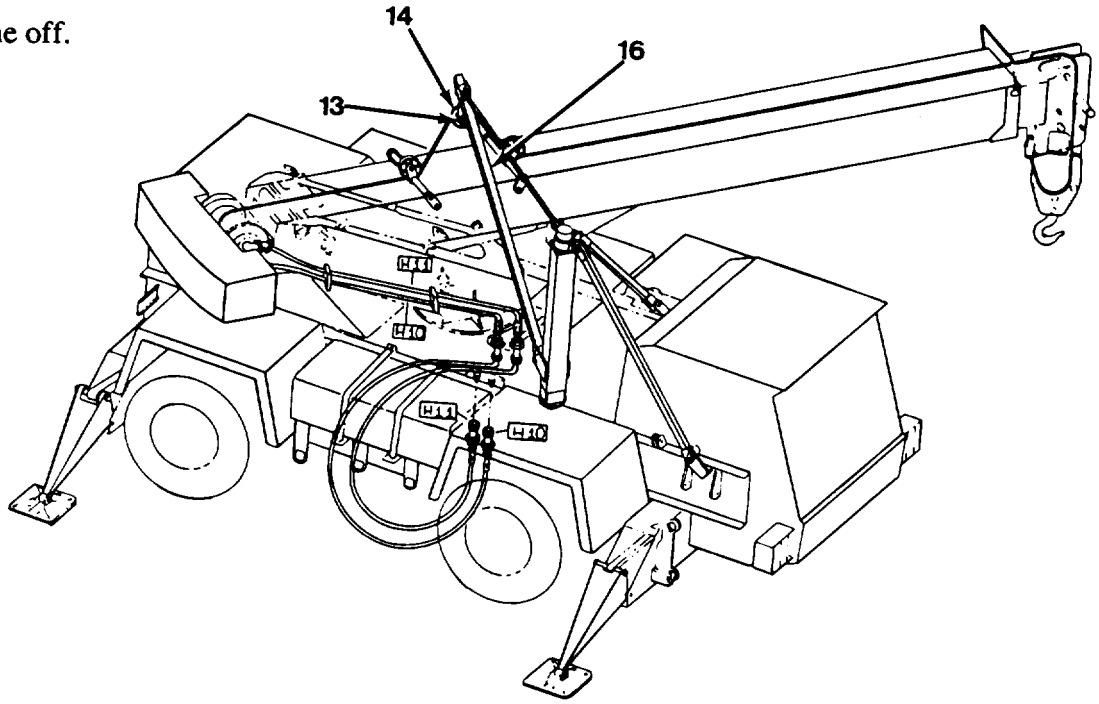

Figure 5-22 *Lifting the Upperstructure*

8. Remove 8 remaining mounting capscrews and 16 flat washers on outside of upperstructure, using a 36 mm socket, two adapters, torque multiplier, short and long extensions, breaker bar and extension bar (Figure 5-23).

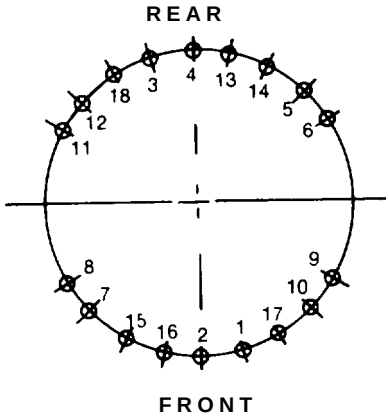

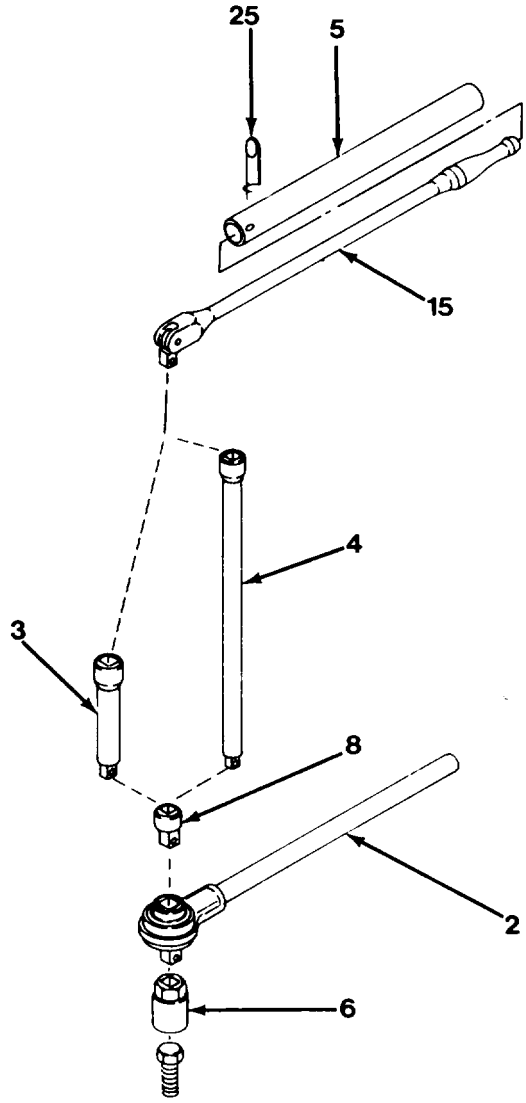

Location Ref.	TOOLS REQUIRED BY TOOL NUMBER (REFER TO PAGE 5-45)							
5	6	3	2	8	15	25	5	
6	6	3	2	8	15	25	5	
7	6	3	2	8	4	15	25	5
8	6	2	8	4	15	25	5	
9	6	4	2	8	15	25	5	
10	6	4	2	8	15	25	5	
11	6	3	2	8	15	25	5	
12	6	3	2	8	15	25	5	

Figure 5-23 Tools *Used for Removal of Mounting Capscrews*

Removing Upperstructure from Carrier

WARNING

Alert all personnel that the upperstructure is to be lifted off the carrier. Keep all uninvolved personnel clear of the vehicle while hoisting and removal are taking place. Check all pin connections, cable alignment and machine bubble level before proceeding with the lift. Failure to follow this procedure could cause DEATH or serious injury.

1. Remove tether rope from tool box and knot rope to boom head quick reeving pin (Figure 5-24).

NOTE

Two personnel are required on the deck next to upperstructure, one on each side, to observe upperstructure separation. Another person is required on the ground to handle the tether rope.

2. Start engine. Hold on anti-two block BY-PASS switch and slowly hoist upperstructure off carrier. Be sure that, while it is raising, it is clearing rotary manifold and electrical collector ring cover. It will not be necessary to clear manifold cover by more than 1 to 2 in. (25 to51 mm). Stop hoisting at this point.

3. Swing upperstructure around and lower it to ground as follows:

   a. Using one person pushing on lift arm and mast assembly, one person guiding counterweight end of upperstructure and one person holding the tether rope, swing upperstructure around to right side of carrier.

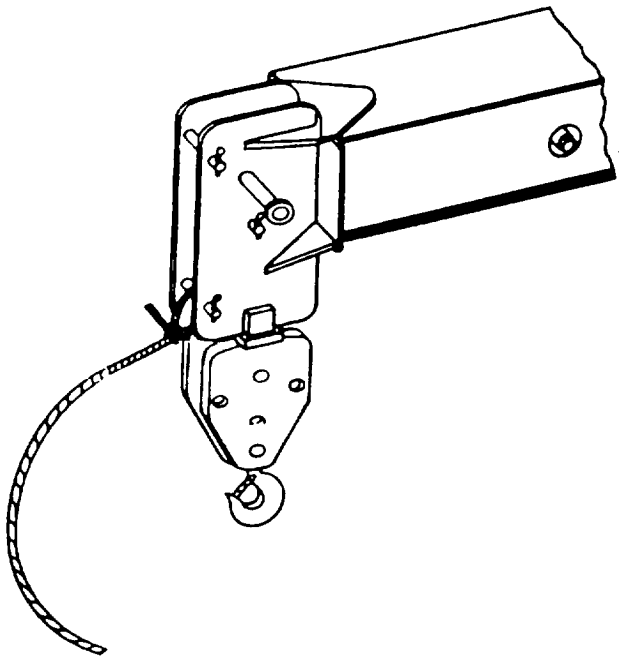

Figure 5-24 *Attached Tether Rope*

b. Align upperstructure parallel to carrier with boom tip to rear and counterweight to front (Figure 5-25).

WARNING

Keep arms and hands from under upperstructure. Failure to follow this procedure could cause SERIOUS INJURY.

c. Install canvas bag, located in tool box, around and under base plate of upperstructure. Pull drawstring tight and tie.

CAUTION

Keep all hoses out of the way when lowering upperstructure. Make sure the winch extension hoses are not pinched against the outrigger beam as the upperstructure is lowered. This could result in damage to the extension hoses.

d. Lower upperstructure until just short of touching ground.

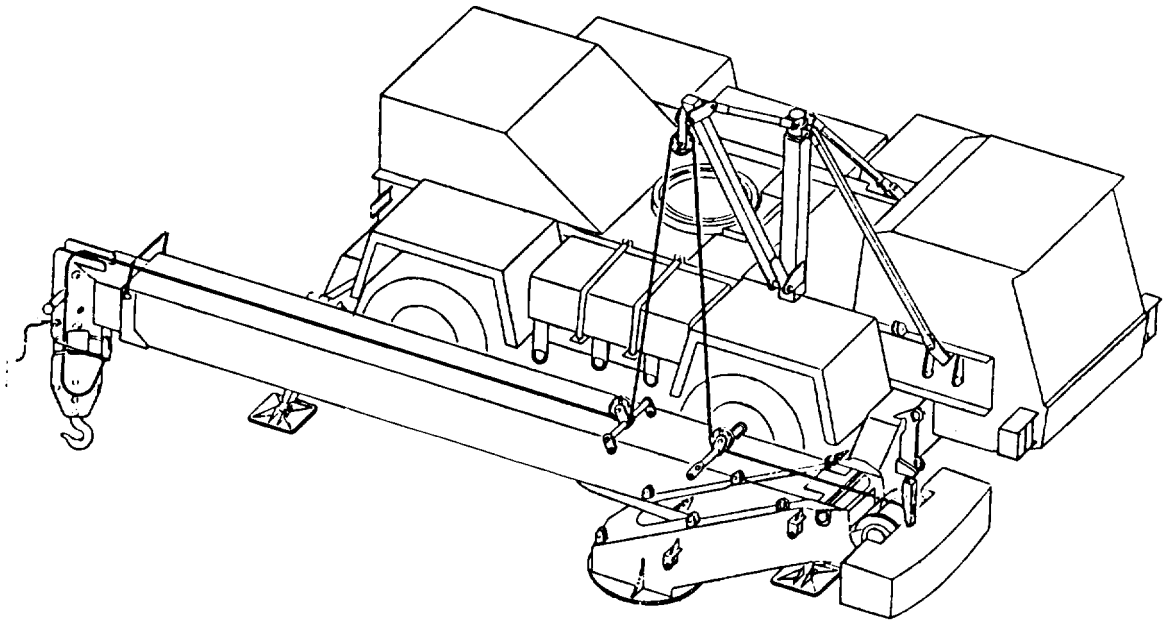

Figure 5-25 *Lowering the Upperstructure*

e. Remove posts (19), (20), (21) and (22) and six pins (23) from storage locations A, D and E (Figures 5-26, 5-27 and 5-28). Two pins (2) and tube (24) are located in tool box. Connect one end of posts (19) and (20) to ends of post (21) with two pins (23). Swing remaining ends of posts (19) and (20) up and attach to ears on side of boom with two pins (23, Figure 5-29). Connect one end of post (22) to center of post (21) with pin (23); then swing other end of post (22) up and attach to ears underneath boom with pin (23). Attach tube (24) to posts (21) and (20) with two pins (2).

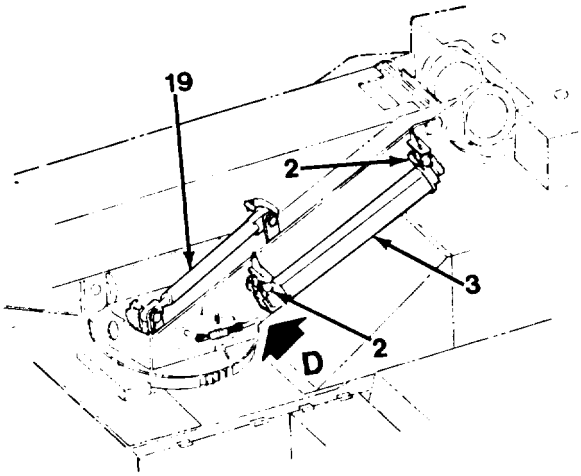

Figure 5-26 *Storage Location D*

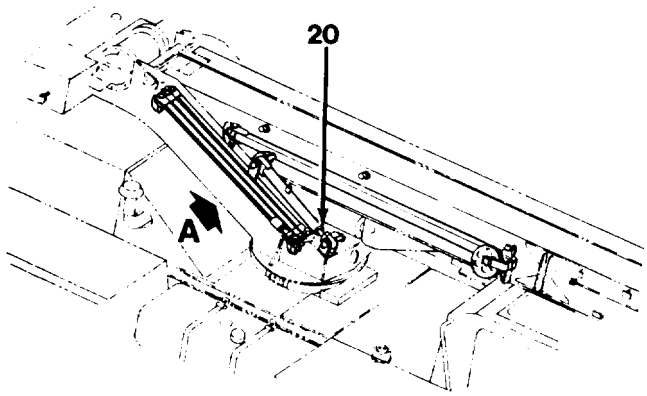

Figure 5-28 *Storage Location A*

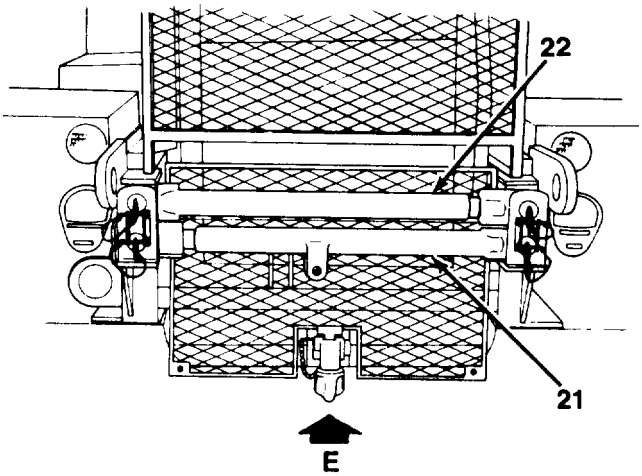

Figure 5-27 *Storage Location E*

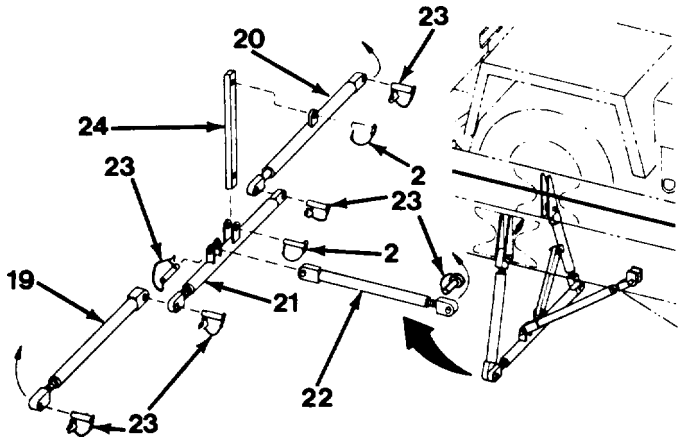

Figure 5-29 *Support for Front of Boom*

NOTE

Make sure hook is turned sideways, and trunnion rotated so that bottom of hook block sets level on ground. Use tether rope around hook to hold hook in place while lowering.

4. Lower upperstructure on to front support between outriggers. Position of lift arm (16) should be straight out from side of carrier frame (Figure 5-30).

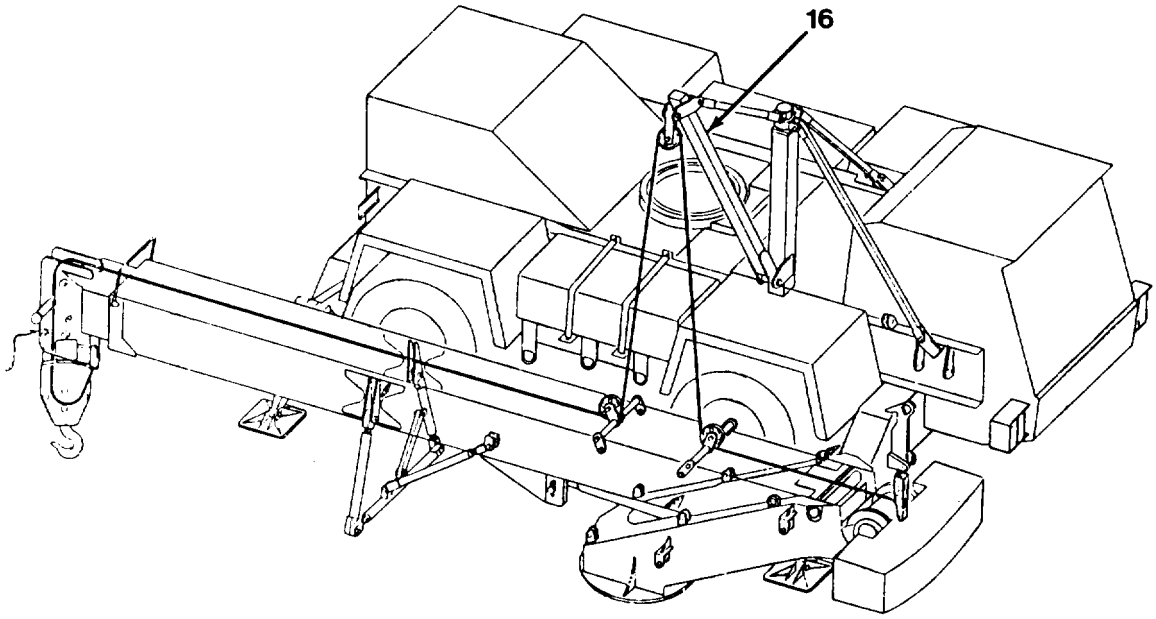

Figure 5-30 *Lowering Upperstructure on Support*

Removing and Stowing Parts Used for Separation

1. When upperstructure is down, continue to pay out approximately 18 ft (5.49 m) to remove tension on hoist cable.

2. Shut engine off.

3. Block cable at winch drum with a wooden wedge (Figure 5-6) to prevent cable from unwinding.

4. Dismantle and restow lift arm (16) as follows:

   a. Remove hoist line from lift arm (16) by removing pin (12) connecting adjustable truss rod (11) to top of mast (3, Figure 5-31).

WARNING

Weight of the lift arm is approximately 95 lb (43 kg), Use two people to properly support the lift arm. Failure to follow this procedure could cause DEATH or serious injury.

   b. Manually lower lift arm (16) down toward boom.

   c. Remove sheave (14) from clevis on lift arm (16). This will leave the cable slack.

   d. Remove adjustable truss rod (11) by removing pin (12) from top of lift arm (16).

   e. Remove bottom pin (17) and lift arm (16) from mast (3, Figure 5-3 1). Restow in storage location B (Figure 5-11) on right side of boom.

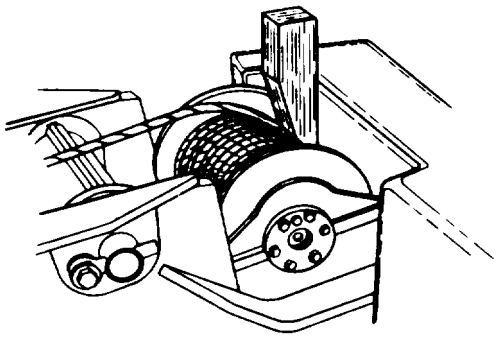

Figure 5-6. *Wedge Block in Winch Drum*

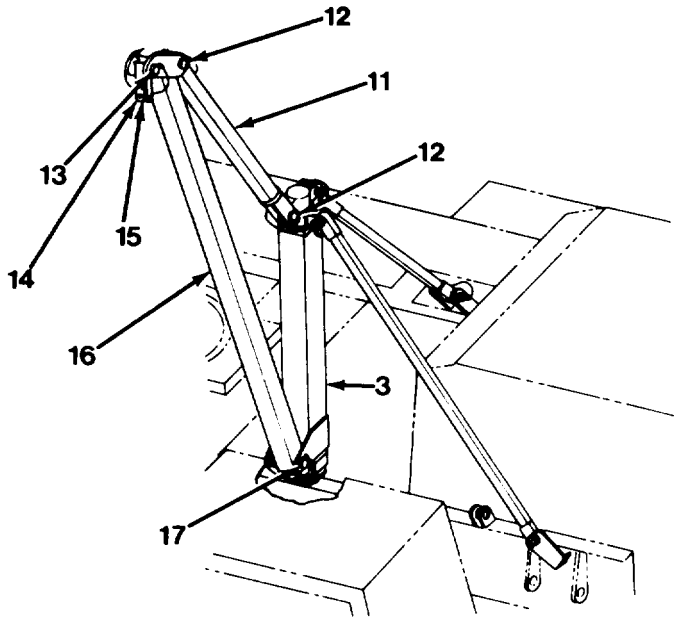

Figure 5-31 *Assembling the Mast*

f. Install sheave (14) back in clevis on lift arm (16). Index sheave pin (13) and lock sheave bracket (15) to side of lift arm (16).

g. Maintain tension on cable and remove wooden wedge from winch drum.

h. Start engine. Hold on anti-two block BY-PASS switch and use winch to pull loose cable down snug against boom, from boom head to winch. Stop as soon as all slack is removed from cable.

i. Shut engine off.

5. Remove and stow mast (3) as follows:

a. Remove two truss rods (10) from mast (3, Figure 5-11A). Stow truss rods (10) and adjustable truss rod (11) in storage location A (Figure 5-11) on upperstructure.

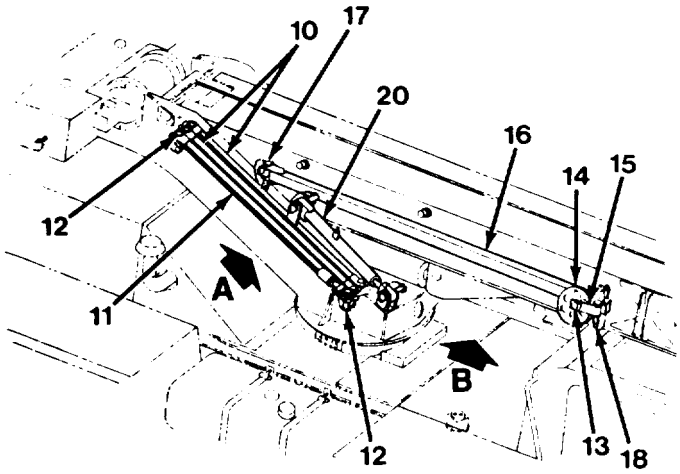

Figure 5-11. *Storage Locations A and B*

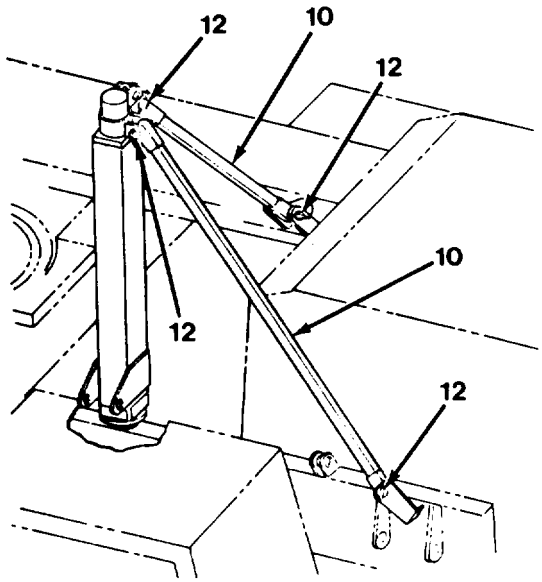

Figure 5-11A. *Installing the Truss Rods*

WARNING

Weight of mast is approximately 98 lb (44 kg). Use two people to properly support and lift mast. Failure to follow this procedure could cause DEATH or serious injury.

b. Lift mast (3) up off pivot bearing and stow in storage location D (Figure 5-4) on upperstructure.

c. Disconnect H-10 and H-11 winch extension hoses from both upperstructure and underneath carrier. Install dust caps on disconnect fittings at winch valve on right side of carrier.

d. Roll up hoses H- 10 and H- 11 and connect ends together (Figure 5-14). Return them to tool box.

e. Remove dust caps and plugs from tool box (three sizes, two of each). Plug or cap open hose ends and all open fittings on rotary manifold (Figure 5-20). Lock dipstick cap on hydraulic tank.

f. Maintain normal rear axle oscillation with rotary manifold disconnected from upperstructure. Remove wrench from tool box and, using two mounting capscrews and four washers, install wrench (Figure 5-32) with pin end engaged in hole of torque arm bracket on rotary manifold. Use breaker bar and 36 mm socket to tighten two mounting capscrews.

g. Thread remaining 16 mounting capscrews and 32 washers back into threaded holes of swing bearing.

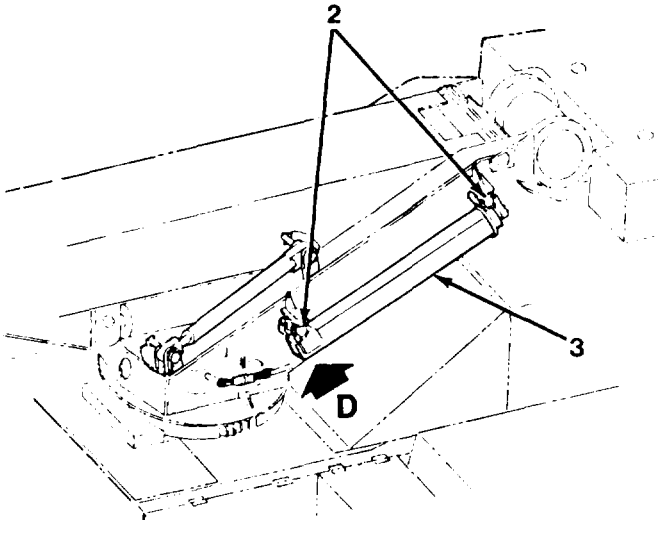

Figure 5-4. Storage Location D

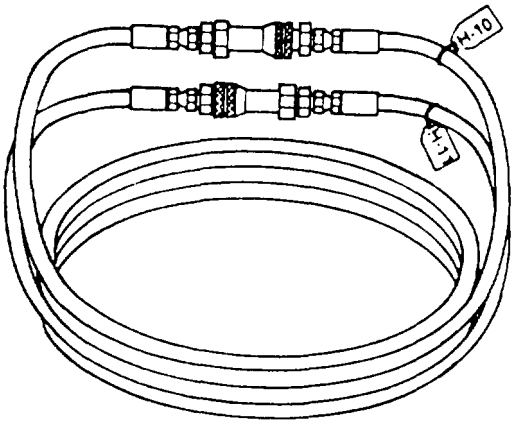

Figure 5-14. Extension Hoses

Preparation of Carrier for Transport

1. Lower carrier to ground, using the following procedure:

   a. Start engine. Raise outrigger beams. Lift outrigger pads that are underneath boom just enough to clear ground.

CAUTION

Do not allow outrigger beam, located under upperstructure, to contact winch hoses. Failure to follow this procedure could cause damage to equipment.

   b. Using swing lever, rotate swing bearing to unlocked position with cam roller on axle lockout valve, located at rear, bottom of rotary manifold, centered in notch.

NOTE

This position will permit oscillation of rear axle when maneuvering carrier away from upperstructure.

2. Use crab steering and short forward-reverse movements to move the carrier until it is clear of upperstructure.

3. Prepare outriggers for travel, using the following procedure:

   a. Raise outrigger beams to travel position.

   b. Shut engine off.

   c. Remove nuts, washers, bolts and pads from ends of outrigger beams. Reinstall bolts, washers and nuts after pads are removed.

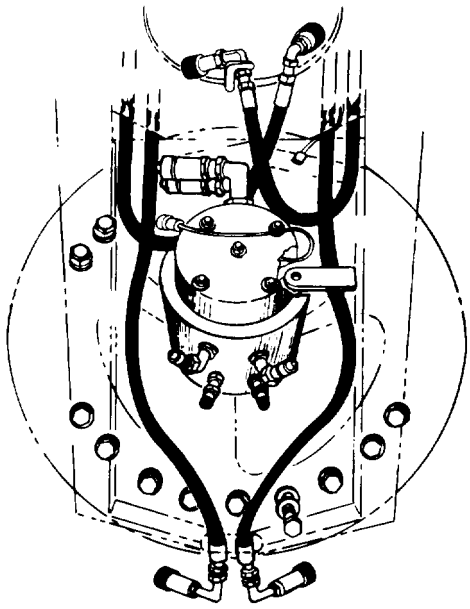

Figure 5-20 ***Location of** Boom **Hoist Cylinder Hoses After Disconnection***

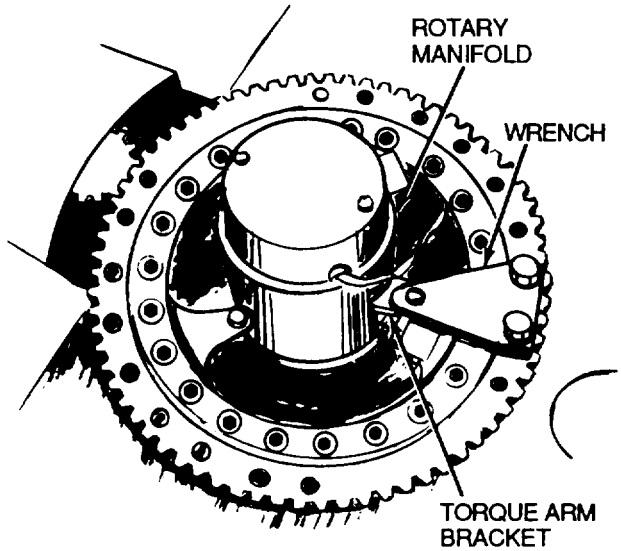

Figure 5-32 *Rear Axle Oscillation*

d. Stow pads in hanger brackets on right side of boom toward tip. Secure with rod (25) and two cotter pins (26, Figure 5-33) located on boom.

4. Clean and stow all remaining items and tools, used for sectionalization disassembly, in tool box.

5. Check fuel tank. Add diesel fuel to bring level up to the 3/4 full mark.

NOTE

Prior to air lifting carrier, rear axle must be in locked position.

6. Start engine. Rotate swing bearing 10 or more degrees from unlocked position (refer to step 1 b). Cam roller on valve must be out of notch on rotary manifold. Shut engine off. The vehicle is now "sectionalized."

Preparation for and Assembly of Sectionalized LRT 110 Type II Crane After External Air Tranport (EAT)

Preparation for Assembly

Carrier is to be positioned parallel to upperstructure on operator's right side, with boom tip to rear and counterweight to front. Front outrigger beam is to be positioned approximately even with upper hose clamp (Figure 5-34).

1. Install pads on outrigger beams.

   a. Remove two cotter pins (26) and rod (25) that stow pads on right side of boom (Figure 5-33). Remove pads for installation and reinstall rod (25) and pins (26) on side of boom.

   b. Remove nuts, washers and bolts from ends of outrigger beams and install pads. Reinstall bolts, washers and nuts to ends of outrigger beams. Torque nuts to 240 lb-ft (325 N ·m).

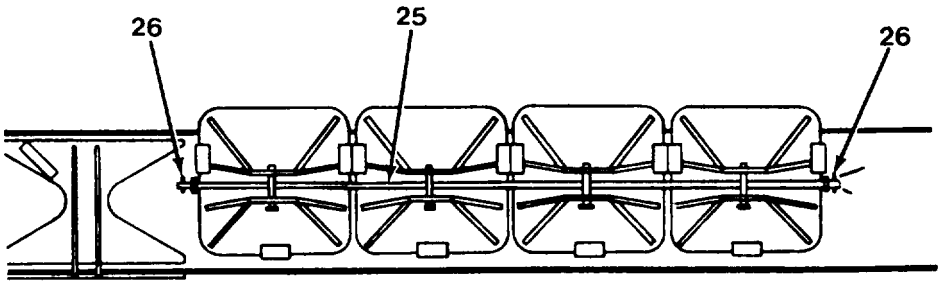

Figure 5-33 *Secure Pads on Boom*

2. Start engine. Position carrier next to upperstructure as follows:

   a. Extend outrigger beams and pads down close to ground.

   b. Using swing lever, rotate swing bearing to unlocked position with cam roller on axle lockout valve, located at rear, bottom of rotary manifold, centered in notch.

   c. Maneuver carrier over toward upperstructure, positioning right front outrigger beam in under upperstructure (Figure 5-34).

WARNING

Vehicle must be level to prevent possible loss of control of upperstructure when lifting off of ground. DEATH or serious injury may result if upperstructure gets out of control

   d. With carrier in place, extend outrigger beams, raising carrier off ground at all four corners. Level carrier, using bubble level on right side of console.

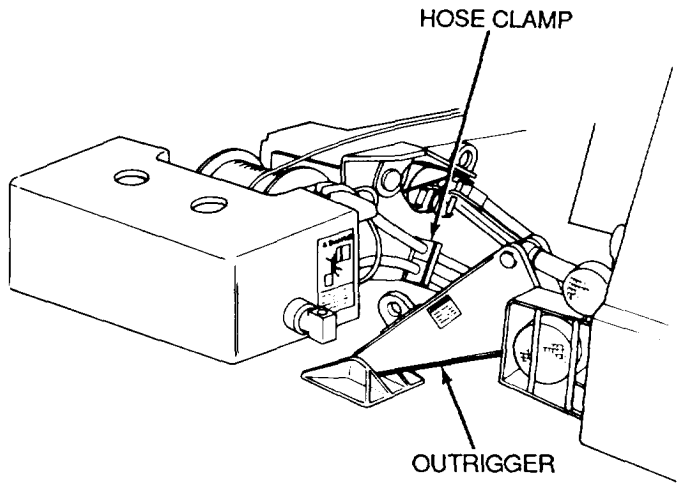

Figure 5-34 *Positioning Outrigger*

e. Align left edge of wrench (Figure 5-32) with right side of lockout valve. Using a 36 mm socket and breaker bar, remove two capscrews and four washers attaching wrench to swing bearing and rotary manifold. Remove wrench and stow in tool box. Capscrews and washers will be installed at a later time.

f. Shut engine off.

g. Remove remaining 16 capscrews and 32 washers from top of swing bearing. Set them aside, for reinstallation at a later time.

h. Check and clean top of swing bearing, if necessary, where upperstructure will be bolted down.

i. Remove all dust caps and plugs from connectors on hoses and rotary manifold in center of swing bearing (Figure 5-20). Stow caps and plugs in tool box.

3. Attach winch extension hoses as follows:

a. Remove two coiled extension hoses (Figure 5-14) from tool box. Their ends are connected together by quick disconnects, and are marked with ID tags reading H-10 and H-11. Take them to right side of carrier.

NOTE

Be sure to keep the hoses and their quick disconnect ends clean during this procedure.

b. Disconnect ends and uncoil hoses.

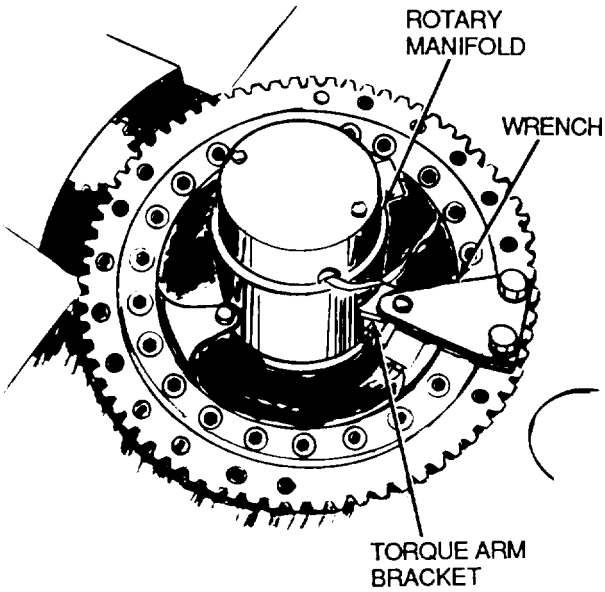

Figure 5-32 *Rear Axle Oscillation*

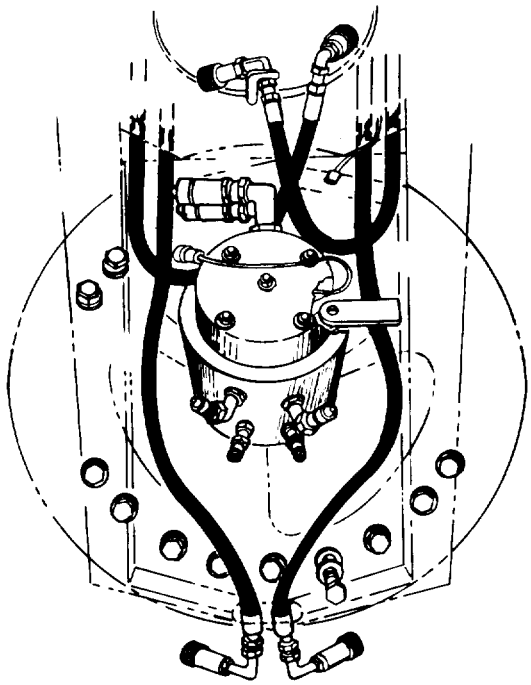

Figure *5-20 Location of Boom Hoist Cylinder Hoses After Disconnection*

WARNING

- Never disconnect hydraulic lines or fittings before venting pressure. Turn dipstick cap 1/4 turn to the safety notch to relieve pressure. Failure to follow this procedure could cause SERIOUS INJURY.

- Turn the face during the following procedure to avoid having hydraulic oil splash in face or eyes. Failure to follow this procedure could cause SERIOUS INJURY.

NOTE

During reconnection of hydraulic quick disconnects, pressure build-up may prevent reconnection. Striking the cone at the center of the disconnect will relieve the pressure.

c. Turn dipstick cap 1/4 turn to safety notch to relieve pressure.

d. Locate two quick disconnect fittings that extend down from two tees on winch valve next to frame, underneath right side of carrier. Remove protective dust caps and connect male connectors of extension hose H-10 to H-10 winch hose and extension hose H-11 to H- 11 winch hose (Figure 5-35). Attach female connectors of extension hose H-10 to H-10 valve fitting and extension hose H-11 to H-11 valve fitting. Stow plugs in tool box.

Winch hoses are now attached from valve to original winch hoses with these extensions.

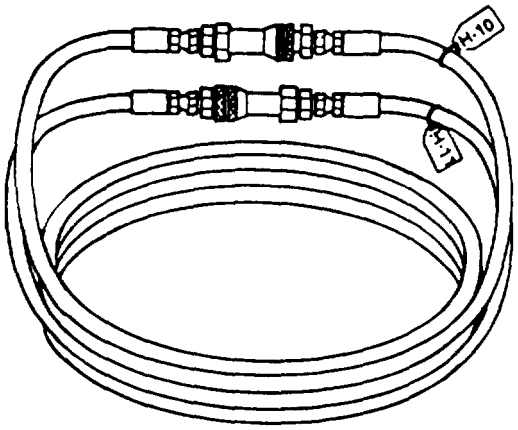

Figure 5-14. *Extension Hoses*

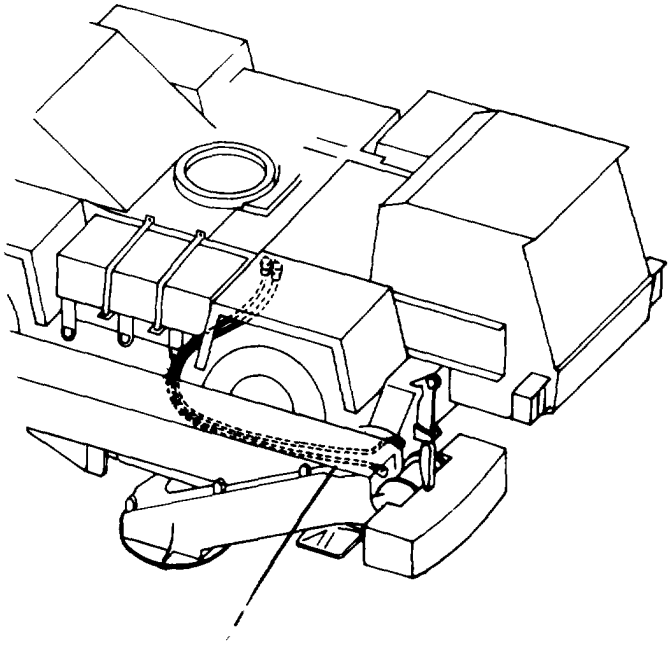

Figure 5-35 *Quick Disconnet Fittings*

WARNING

Be aware of limited work area while lifting, reaching and assembling mast and lift arm. Deck and fender surface is small and can become slippery in inclement weather. Failure to follow this procedure could cause DEATH or serious injury.

4. Install mast (3) on carrier as follows:

WARNING

Weight of the mast is approximately 98 lb (44 kg). Use two people to properly support and lift mast. Failure to follow this procedure could cause DEATH or serious injury.

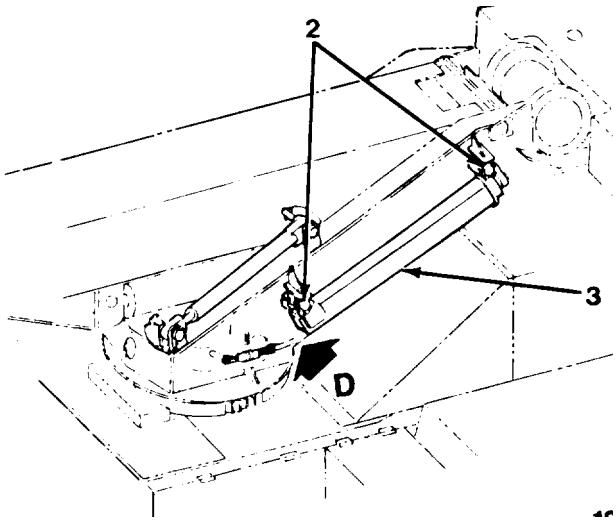

Figure 5-4. *Storage Location D*

a. Remove two pins (2) and mast (3) from storage location D (Figure 5-4) on left side of upperstructure. Store two pins (2) in tool box for future use.

b. With the aid of another person, raise mast (3) and lower it over square pivot bearing (9, Figure 5-10), located on right side of frame, behind operator's cab. Position stop on mast (3) towards center line of vehicle between stops. Mast base ears should be over fender. Align ears on top of mast with support ears on frame.

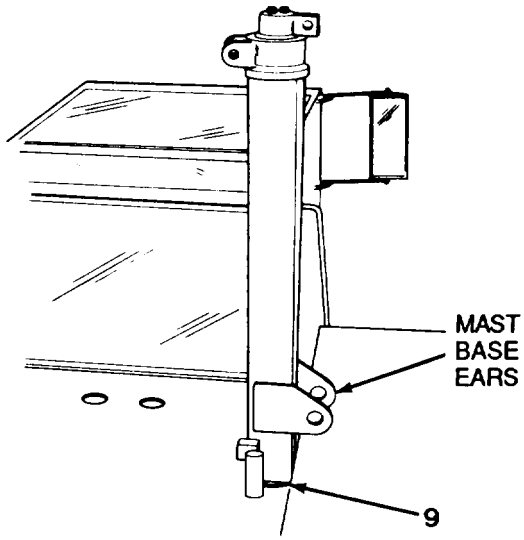

Figure 5-10. *Assembling the Mast*

Figure 5-11. *Storage Locations A and B*

c. Remove two truss rods (10), adjustable truss rod (11) and six pins (12) from storage location A (Figure 5-11) on right side of upperstructure. Install two truss rods (1 O) to top of carrier frame, one on left side, behind cab, and the remaining one on right side of cab. Install four pins (12) in connecting points (Figure 5-11A).

5. Install lift arm (16, Figure 5-12) as follows:

a. With lift arm (16) still in storage location B on right side of boom, pull out sheave pin (13) and remove sheave (14) from sheave bracket (15, Figure 5-11).

b. Temporarily lay sheave (14) aside.

WARNING

Weight of the lift arm is approximately 95 lb (43 kg). Use two people to properly support and lift the lift arm. Failure to follow this procedure could cause DEATH or serious injury.

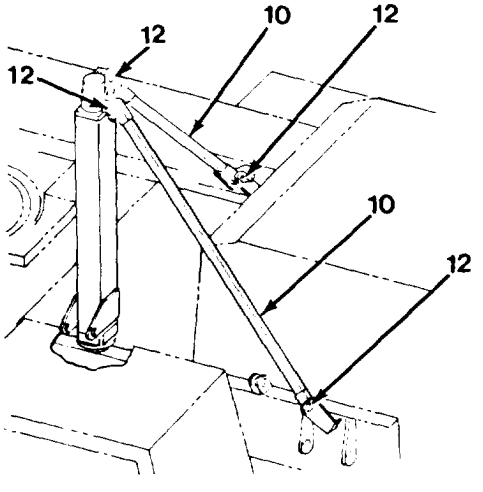

Figure 5-11A. *Installing the Truss Rods*

c. Remove lift arm (16) and pins (17) and (18) from storage brackets. Place pin (18) in tool box for future use.

d. With sheave bracket (15) down, connect lift arm (16) to base of mast (3) with pin (17, Figure 5-12).

NOTE

Adjustable truss rod (11) has been permanently adjusted for the LRT 110 Crane and should never require adjustment.

e. Using two pins (12), attach adjustable truss rod (11) to top of lift arm (16) and then to top of mast (3). Mast and arm assembly is now complete.

f. Swing assembly around and position over rear fender.

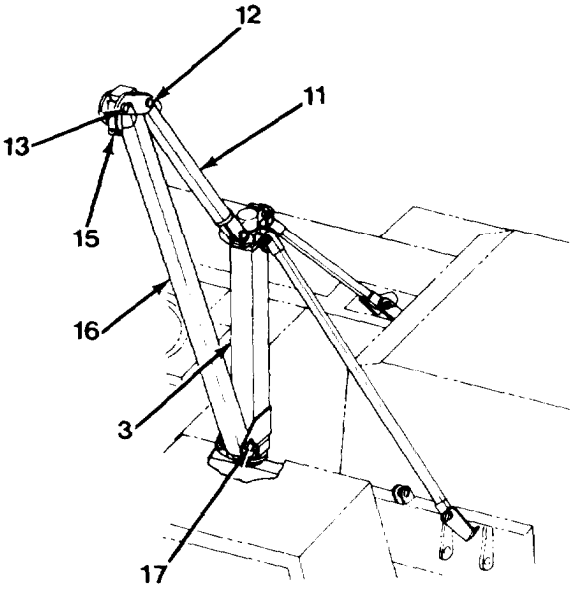

Figure 5-12. *Assembling the Mast*

Preparing the Upperstructure for Lift

1. Remove wedge block from tool box and locate it near winch.

2. Start engine. Lower hook block to ground. Pay out a loop of cable approximately 18 ft (5.49 m) from winch to reach up to sheave clevis at top of lift arm (16, Figure 5-36). Using wedge block, wedge cable to prevent cable unspooling (Figure 5-6).

3. Take loose sheave (14, Figure 5-36) that was removed from lift arm (16) in step 5.a of Preparation for Assembly and insert it in slack of cable.

WARNING

Check that all pins and pinlocks are installed and secured properly. DEATH or serious injury may result if upperstructure comes loose.

4. Raise sheave (14) and cable up into clevis on lift arm (16) and using sheave pin (13), install sheave (14) in clevis. Swing lift arm (16) over upperstructure.

5. Maintain tension on end of cable and remove wedge block from cable spool. Operate winch until hook block is secured to boom head.

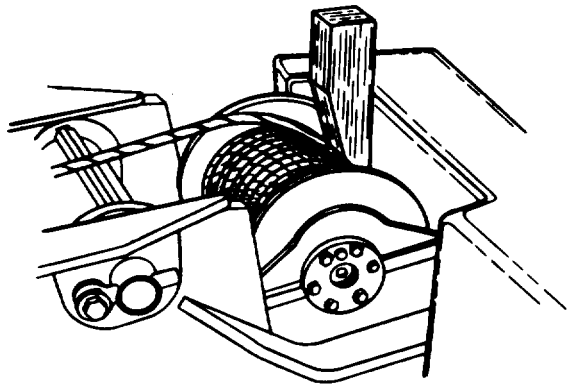

Figure 5-6. *Wedge Block in Winch Drum*

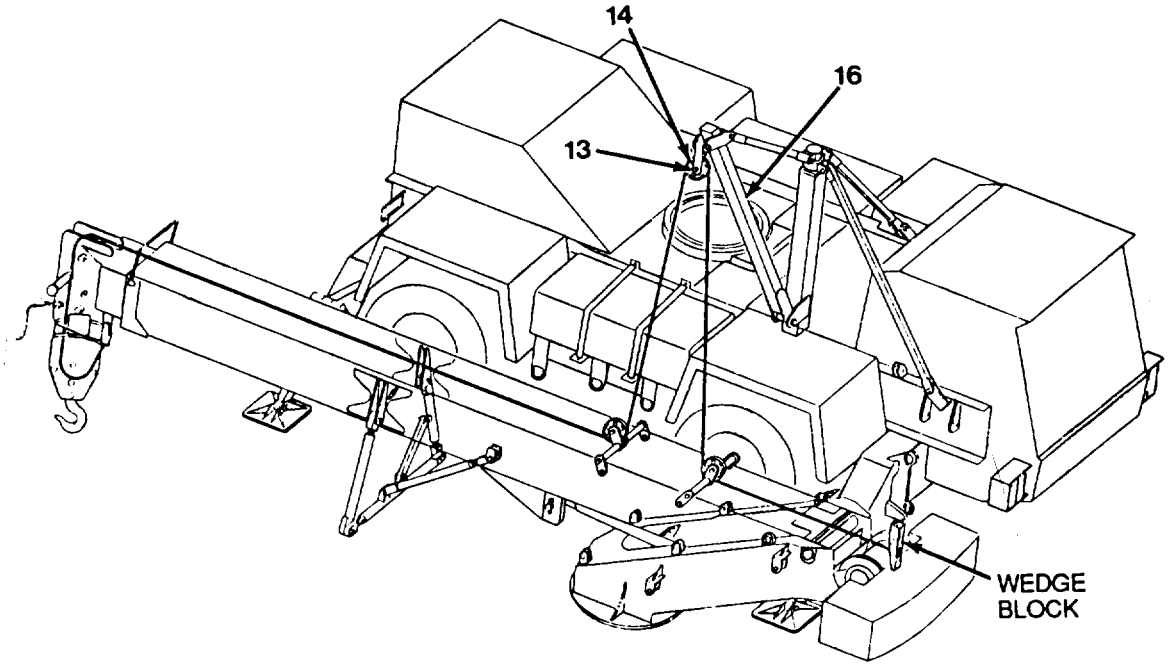

Figure *5-36* *Preparing Upperstructure for Lift*

6. Remove tether rope from tool box and knot rope to boom head quick reeving pin (Figure 5-24).

7. Hold on anti-two block BY-PASS switch and use winch to slowly hoist upperstructure until support bracket clears ground.

8. Remove three pins (23, Figure 5-37) from boom support that connects it to upperstructure and remove boom support. Set aside for later disassembly and storage.

9. Remove protective bag from base plate of upperstructure and place in tool box.

Lifting Upperstructure onto Carrier

WARNING

Stay clear of hoisted upperstructure while it is being positioned over carrier. Failure to follow this procedure could cause DEATH or serious injury.

1. With one person handling the tether rope, raise upperstructure high enough to check bottom of mounting base plate to see if it is clean. Remove any foreign material that may have accumulated on mounting base plate.

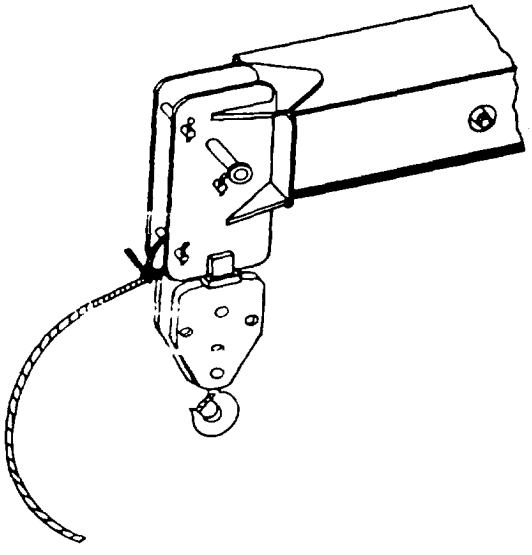

Figure 5-24 *Attached Tether Rope*

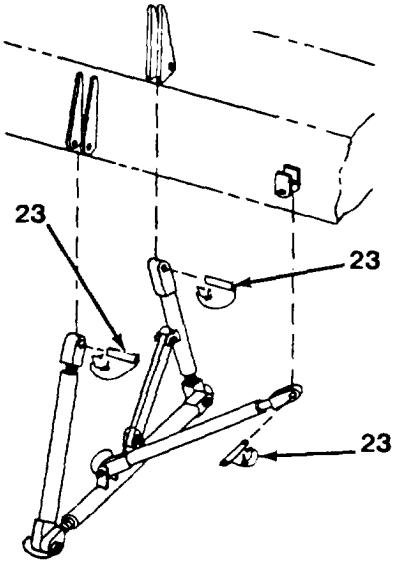

Figure 5-37 *Boom Support Removal*

NOTE

Two personnel are required on the deck next to the upperstructure, one on each side, to observe the upperstructure alignment. Another person is required on the ground to handle the tether rope.

2. Continue to hoist assembly high enough to clear rotary manifold and electrical collector ring cover (1 to 2 in. [25.4 to 50.8 mm] is sufficient).

3. By pushing on lift arm and pulling with tether rope, manually swing upperstructure into mounting position with boom pointing in a 10 o'clock direction on left side of carrier (Figure 5-38).

WARNING

Keep hands and arms clear of all pinch points while checking the alignment of the upperstructure and the carrier mounting surface. Failure to follow this procedure could cause SERIOUS INJURY.

CAUTION

Make sure the base plate opening clears the connections on the rotary manifold, Failure to follow this procedure could cause damage to equipment.

4. Slowly lower the upperstructure over rotary manifold to within 0.5 in. (13 mm) of rotary manifold.

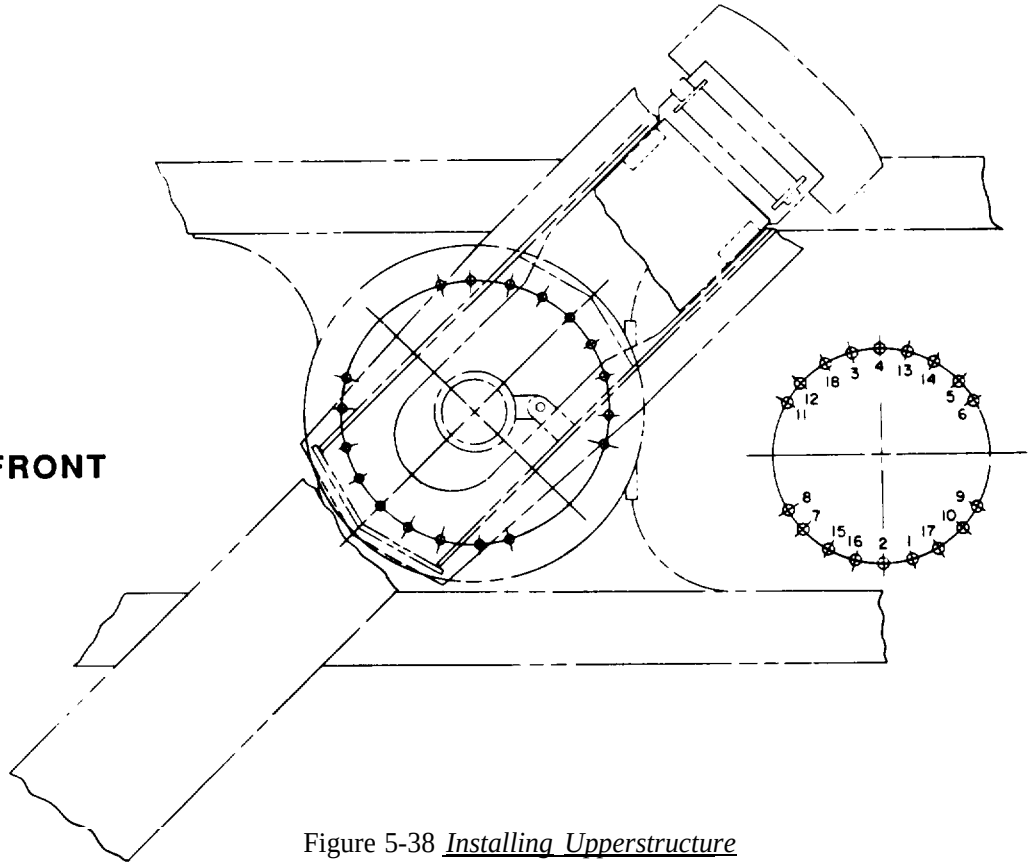

Figure 5-38 *Installing Upperstructure*

Installing Upperstructure on Carrier

1. Align the upperstructure and swing bearing by manually starting four mounting capscrews and eight washers into the outside comer holes 6, 8, 9 and 11 (Figure 5-38). Lower upperstructure to swing bearing.

2. Align torque arm on rotary manifold and anchor ear on inside of upperstructure frame by swinging the upperstructure.

3. With alignment correct, install four mounting capscrews and eight washers in remaining outside mounting holes. Tighten eight mounting capscrews. The final torquing will be done after remaining mounting capscrews are installed on inside of upperstructure.

Removing and Stowing Parts Used for Assembly

1. Remove hoist cable from lift arm (16) as follows:

   a. Remove tether rope from boom head and stow in tool box.

   b. Lower hook block to ground and pay out cable 12 in. (305 mm) while maintaining tension on cable. Insert wedge block in winch drum (Figure 5-6).

   c. Remove sheave (14) and cable from lift arm (16) by removing pin (13) from the clevis that retains sheave (14, Figure 5-39). Temporarily lay pin (13) and sheave (14) aside.

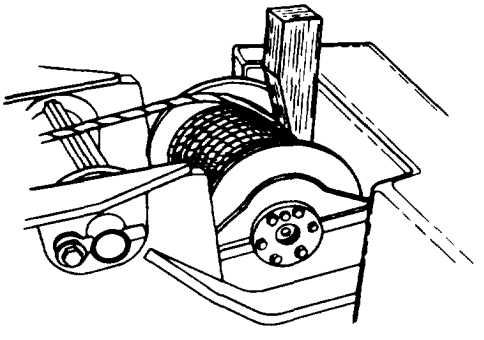

Figure 5-6. *Wedge Block in Winch Drum*

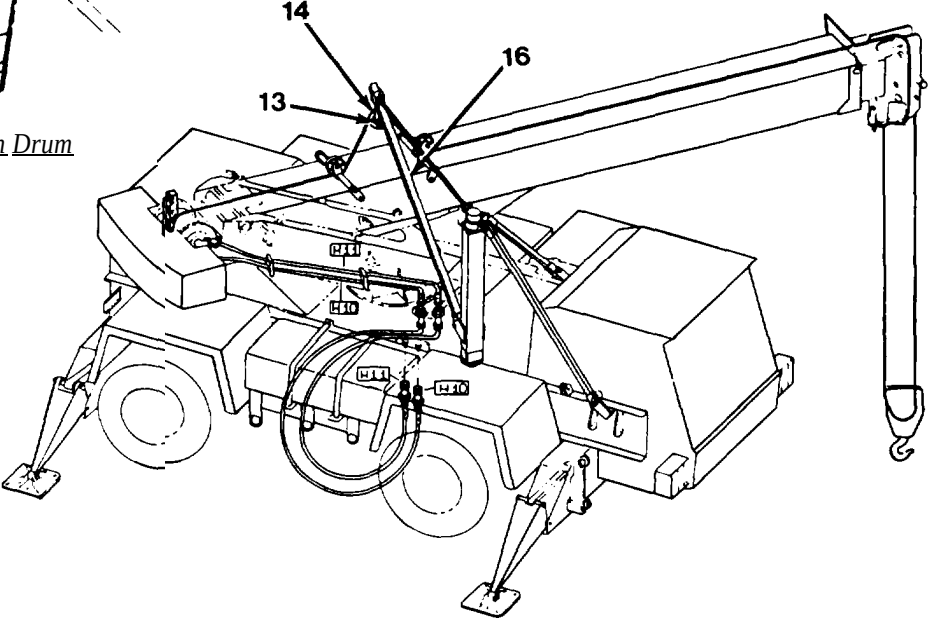

Figure 5-39 *Lifting the Upperstructure*

d. Swing lift arm and mast out of the way.

e. Shut engine off.

2. Disconnect winch extension hoses as follows:

a. Relieve pressure in winch circuits by turning ignition switch ON, holding on anti-two block BY-PASS switch and operating winch lever in both directions several times until pressure is released. Turn ignition switch OFF.

WARNING

Turn the face during the following procedure to avoid having hydraulic oil splash in face or eyes. Failure to follow this procedure could cause SERIOUS INJURY.

b. Disconnect winch extension hoses H-10 and H-11 (Figure 5-15) from both upperstructure and underneath carrier. Do not connect winch lines to rotary manifold at this time. Install dust caps on quick disconnect fittings on valve under carrier.

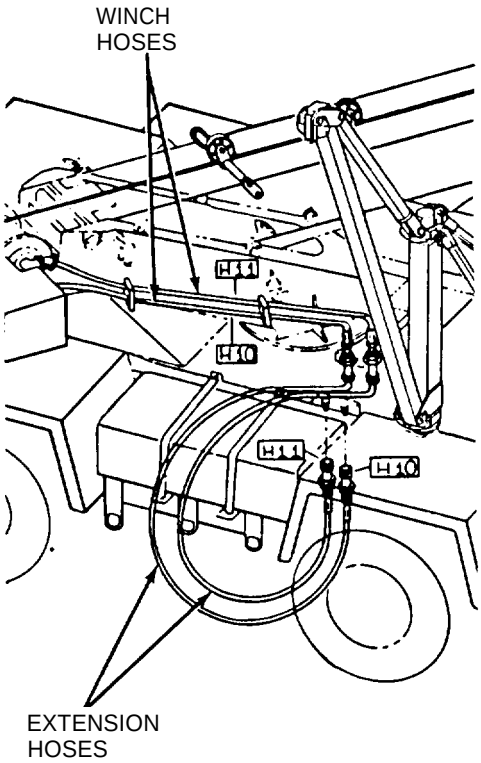

Figure 5-15. *Quick Disconnect Fittings*

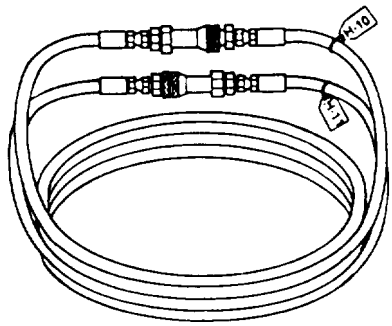

Figure 5-14. *Extension Hoses*

c. Roll up hoses H-10 and H-11 and connect ends together (Figure 5-14). Return them to tool box.

3. Relieve pressure in extend-retract and boom hoist circuits by turning ignition switch ON, holding on anti-two block BY-PASS switch and operating extend-retract and boom hoist levers several times in both directions until pressure is released. Turn ignition switch OFF.

4. Push the boom hoist cylinder hoses, sticking out through cutout in front of upperstructure, back inside and attach to fittings on rotary manifold (Figure 5-19).

5. Remove toggle sheave brackets (5) and attaching links (4) from boom (Figure 5-8) as follows:

a. Remove two pins (6) and sheaves (8) from toggle sheave brackets (5). Stow sheaves (8) in tool box. Remove cable from bracket (5) and restow pins (6) in brackets (5).

b. Remove lynch pins (7) and attaching links (4) from studs on top of boom.

c. Remove cable from between ears and remove toggle sheave brackets (5).

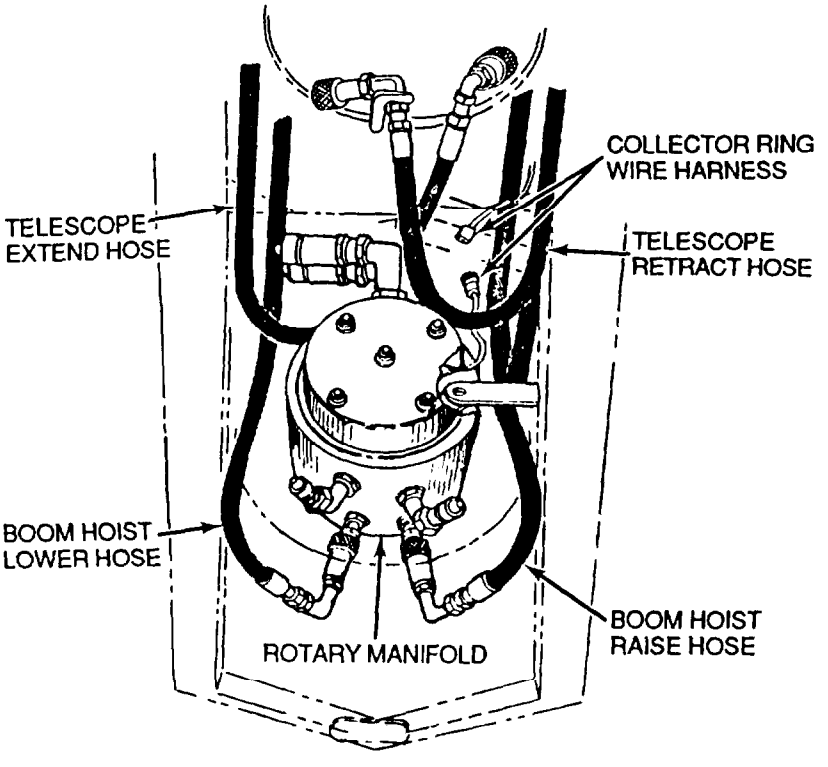

Figure 5-19 *Rotary Manifold* Hoses

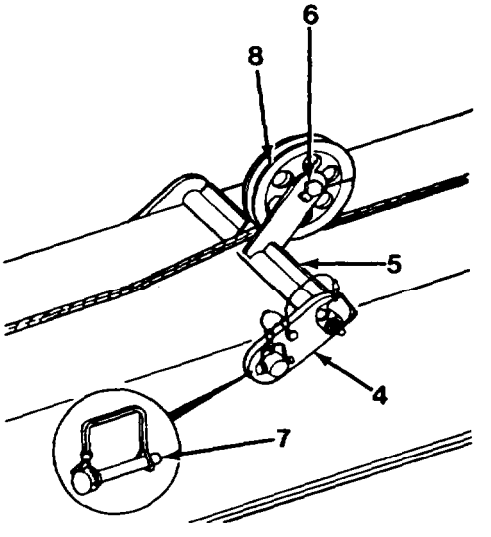

Figure 5-8 *Sheaves*

d. Stow toggle sheave brackets (5)with attaching links (4) in storage location C, on bracket on right-hand front of earner (Figure 5-7). Secure with pins (6) connected to the attaching links (4).

Completion of Upperstructure Assembly

1. Install anti-two block counterweight (Figure 5-2) as follows:

   a. Remove clevis from anti-two block switch on boom head. Hook the weight chain on clevis and reinstall on anti-two block switch.

   b. Using a 6 mm hex allen wrench, open counterweight halves.

   c. Install weight halves around hoist line hanging down over boom head sheave. Secure halves with thumbscrews.

2. Raise boom and install mounting capscrews inside upperstructure using the following procedure:

   a. Swing mast and arm assembly out of the way.

   b. Start engine. Raise boom to a minimum of 45-degree angle.

   c. Shut engine off.

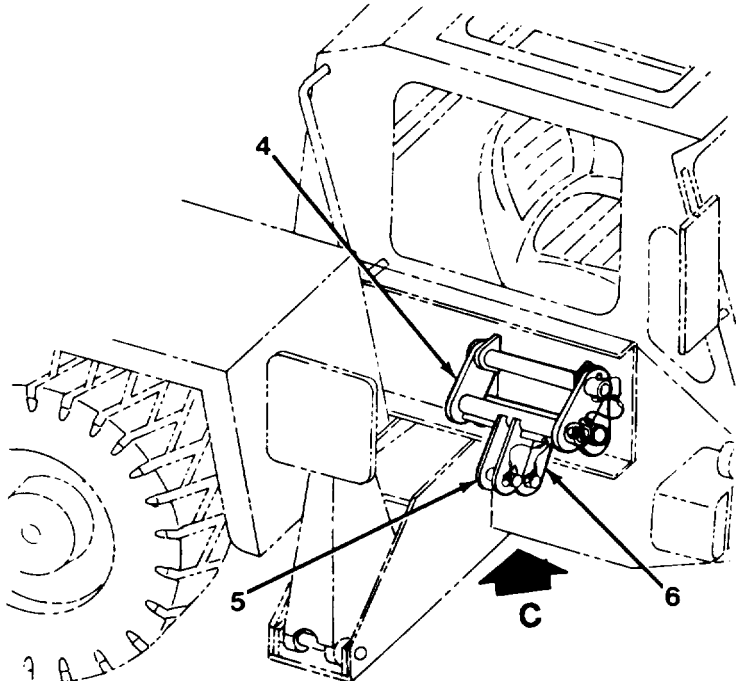

Figure 5-7. *Storage Location C*

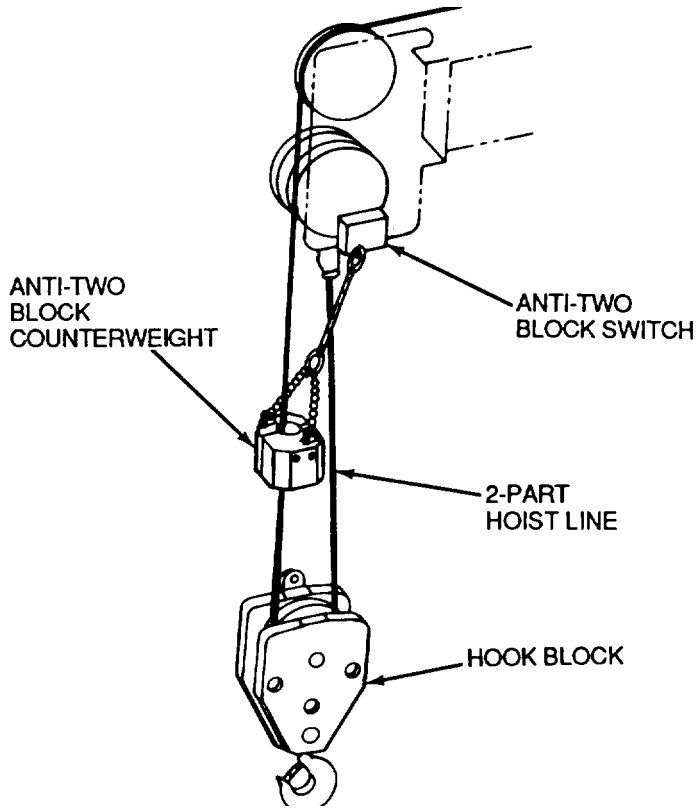

Figure 5-2. *Anti-Two Block Counterweight, Switch and Hook Block*

d. Remove stop pin and lockwasher from tool box and install in upperstructure torque arm bracket. Make sure end of stop pin goes down through ear on side of rotary manifold. Tighten stop pin with a 36 mm socket and breaker bar (Figure 5-40).

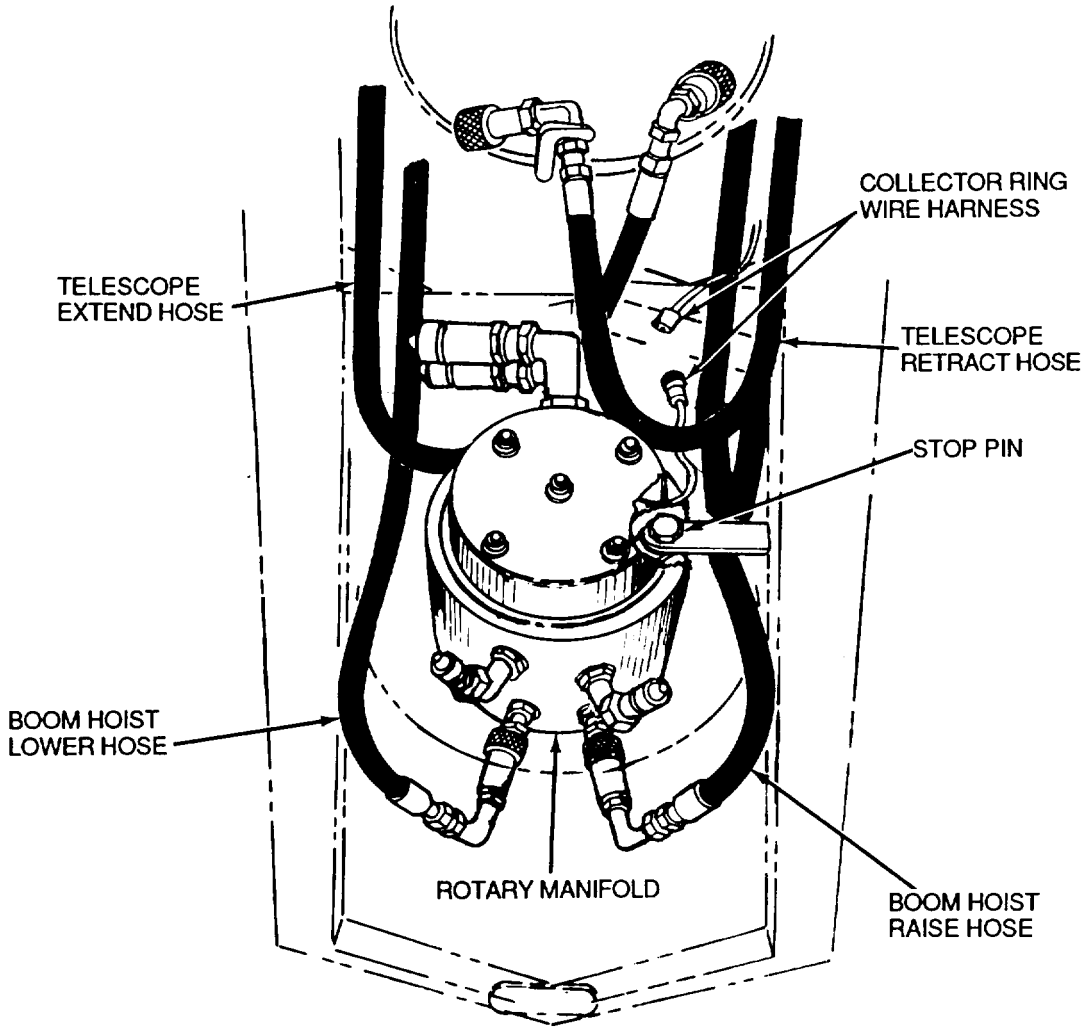

Figure 5-40 *Rotary Manifold Hoses*

e. Install 10 mounting capscrews and 20 washers inside of upperstructure (Figure 5-41).

f. Tighten all 18 capscrews. Refer to Figure 5-41 for torquing sequence and tool requirements for each mounting capscrew. Set the torque wrench to 205 lb-ft (278 N·m). Using torque multiplier in conjunction with torque wrench, the actual torque on the capscrew is 722 lb-ft (979 N·m).

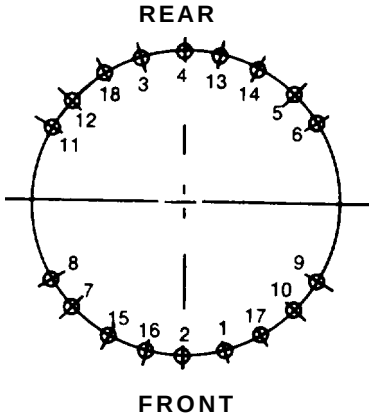

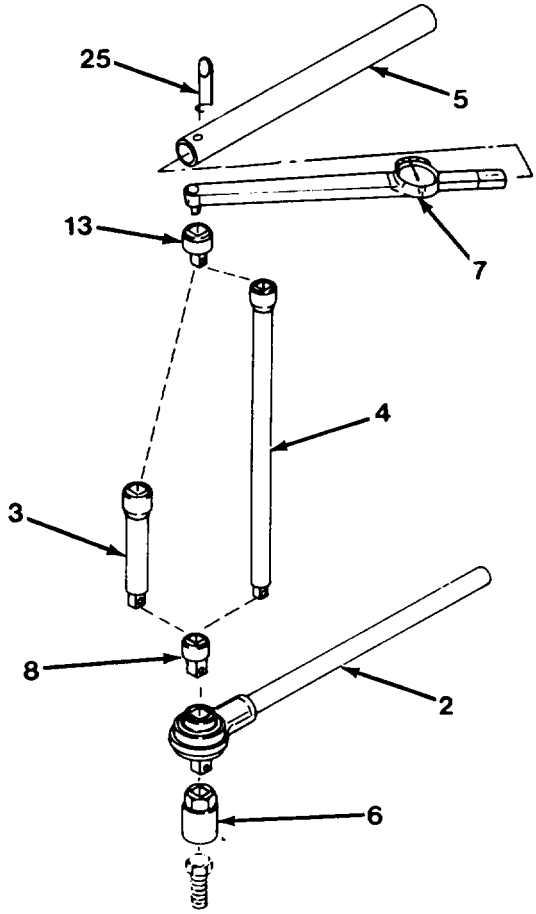

Location Ref.	TOOLS REQUIRED BY TOOL NUMBER (REFER TO PAGE 5-45)								
1	6	2	8	4	13	7	25	5	
2	6	2	8	4	13	7	25	5	
3	6	3	2	8	4	13	7	25	5
4	6	2	8	4	13	7	25	5	
5	6	3	2	8	4	13	7	25	5
6	6	3	2	8	4	13	7	25	5
7	6	3	4	2	13	7	25	5	
8	6	3	4	2	13	7	25	5	
9	6	3	4	2	13	7	25	5	
10	6	3	4	2	13	7	25	5	
11	6	3	2	7	25	5			
12	6	3	2	7	25	5			
13	6	3	2	8	4	13	7	25	5
14	6	3	2	8	4	13	7	25	5
15	6	4	2	7	25	5			
16	6	4	2	7	25	5			
17	6	4	2	7	25	5			
18	6	3	2	8	4	13	7	25	5

Figure 5-41 *Tools Used for Tightening of Capscrews*

3. Connect hoses and wiring harness to rotary manifold using the following procedure:

   a. Relieve pressure in extend-retract valve circuit by turning ignition switch ON, holding on anti-two block BY-PASS switch and operating boom extend-retract lever in both directions several times until pressure is released. Turn ignition switch OFF.

   b. Connect extend-retract hoses, hooked under tabs (Figure 5-13), onto rotary manifold.

   c. Remove plugs from winch hoses and stow in tool box. Connect winch hoses H-10 and H-11 to connectors on rotary manifold.

   d. Reconnect wiring harness on collector ring. The anti-two block system is now operable.

   e. Check to make sure the torque arm stop pin, hoses and wiring harness are all in place and connected to rotary manifold.

   f. Turn hydraulic reservoir cap 1/4 turn clockwise to close reservoir.

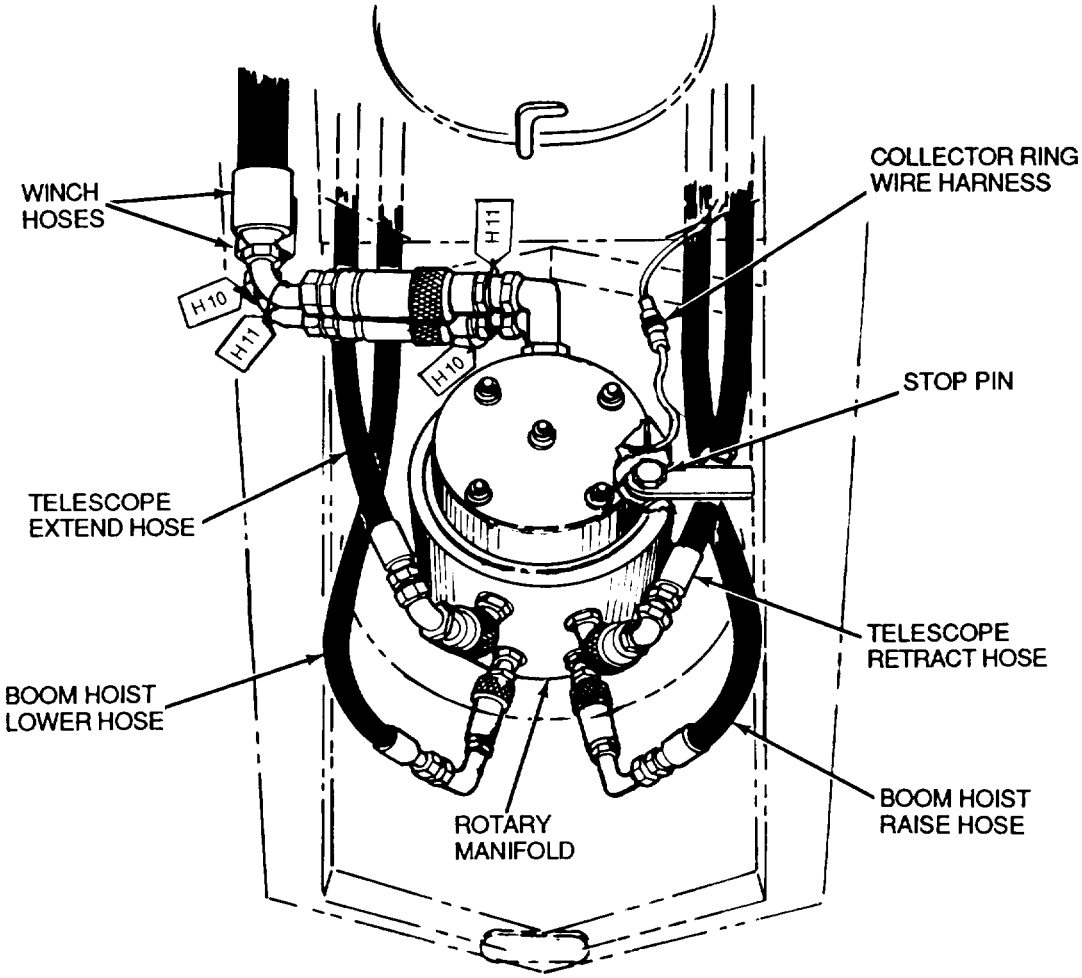

Figure 5-13. *Rotary Manifold Hoses*

Removal and Stowage of Remaining Parts Used in Assembly

1. Lower boom to horizontal position using the following procedure:

   a. Remove wedge from winch and stow in tool box.

   b. Start engine. Lower boom to a horizontal position while raising hook block.

   c. Remove plate (1) from top of hook block (Figure 5-3) and stow in tool box.

   d. Shut engine off.

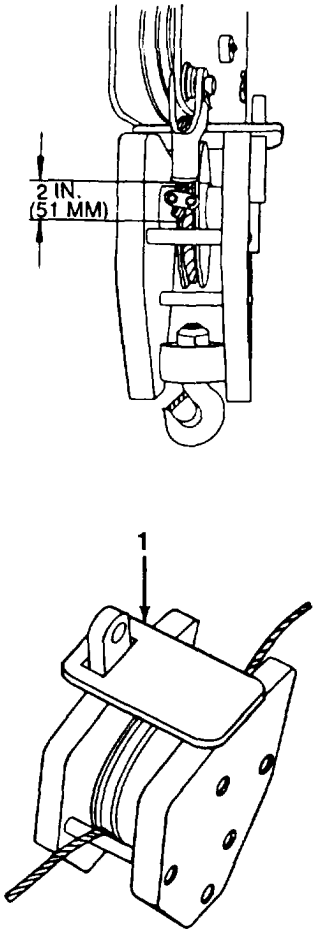

Figure 5-3. Preparation for Raising the Hook Block

2. Remove and stow lift equipment as follows:

WARNING

Weight of lift arm is approximately 95 lb (43 kg). Use two people to properly support and lift the lift arm. Failure to follow this procedure could cause DEATH or serious injury.

   a. Remove pin (12) from adjustable truss rod (11) at top of mast (3) and lower lift arm (16) to deck. Remove pin (12) from adjustable truss rod (11) and set adjustable truss rod (11) aside temporarily. Remove pin (17) from lift arm (16) at base of mast (3, Figure 5-42).

   b. Remove lift arm (16) and stow in location B using one pin from tool box. Install sheave (14) back in clevis on lift arm (16) with pin (13). Index sheave pin (13) and lock sheave bracket to side of lift arm (16, Figure 5-11).

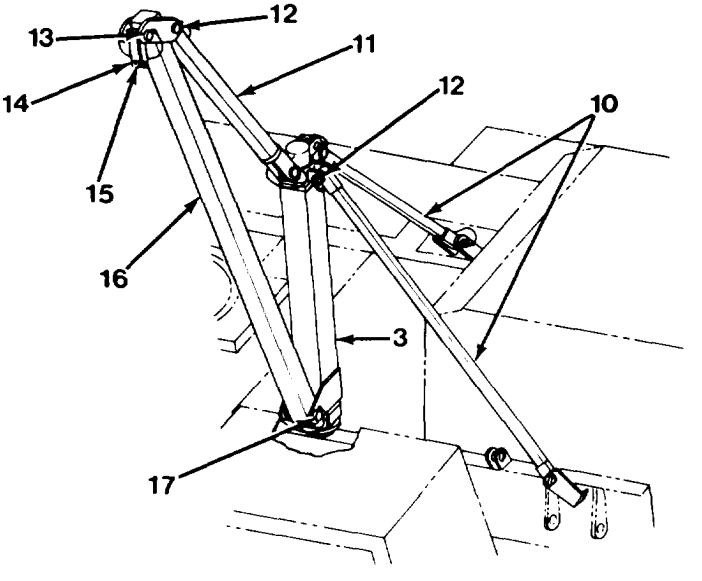

Figure 5-42 *Disassembling the Mast*

c. Remove two truss rods (10) from mast (3, Figure 5-42) and stow two truss rods (10) and adjustable truss rod (11, Figure 5-11) in location A on upperstructure.

WARNING

Weight of mast is approximately 98 lb (44 kg). Use two people to properly support and lift the mast. Failure to follow this procedure could cause DEATH or serious injury.

d. Remove mast (3, Figure 5-42) and lay on deck.

e. Disassemble and stow boom support that was removed in step 8 of Preparing the Upperstructure for Lift. Remove two pins (2) and tube (24, Figure 5-29) and store in tool box. Remove three remaining pins (23) that connect posts (19), (20) and (22) to post (21). Using pins (23), stow post (19) at storage location D (Figure 5-26) on upper structure, post (20) at storage location A (Figure 5- 11) on upperstructure and posts (21) and (22) at storage location E (Figure 5-27) on frame.

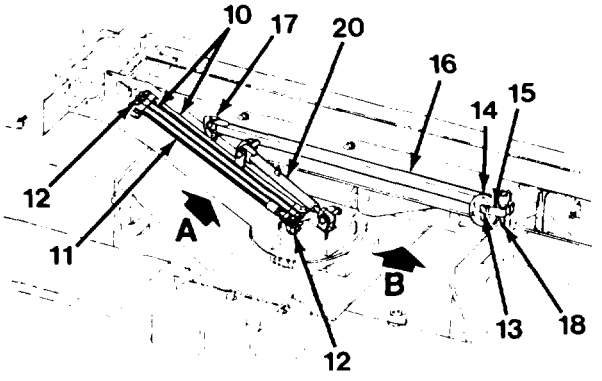

Figure 5-11 Storage *Locations A and B*

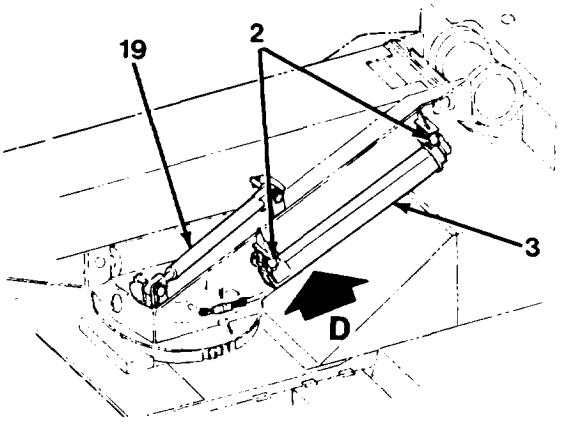

Figure **5-26** *Storage Location D*

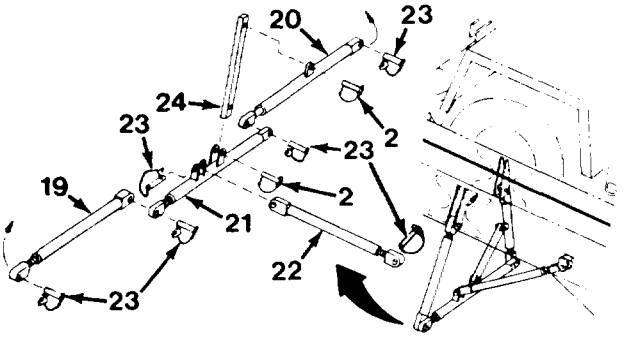

Figure 5-29 *Support for Front of Boom*

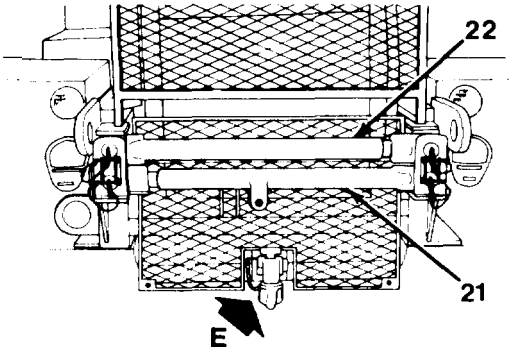

Figure *5-27 Storage Location E*

f. Start engine.

g. Swing boom to 2 o'clock position and stow mast (3) on upperstructure storage location D (Figure 5-4) using additional pin from tool box.

h. Shut engine off.

3. Account for and clean all tools used in assembly procedures. Put away all tools in tool box.

Lower the LRT 110 Crane to the Ground

CAUTION

When attaching hook block to hook block tieback, take up cable slowly while lowering boom to prevent damage to windshield.

1. Start engine. Center boom over cab and raise boom to a 50-degree angle. Lower hook block down far enough to hook it into hook block tieback on front of the LRT 110 Crane. Lower boom to travel position while taking up slack in cable.

2. Raise outriggers, lowering the crane to ground. Retract outrigger beams up to travel position. Shut engine off.

3. Recheck stowage of all items used for assembly of the LRT 110 Crane, The crane is now ready for normal operation.

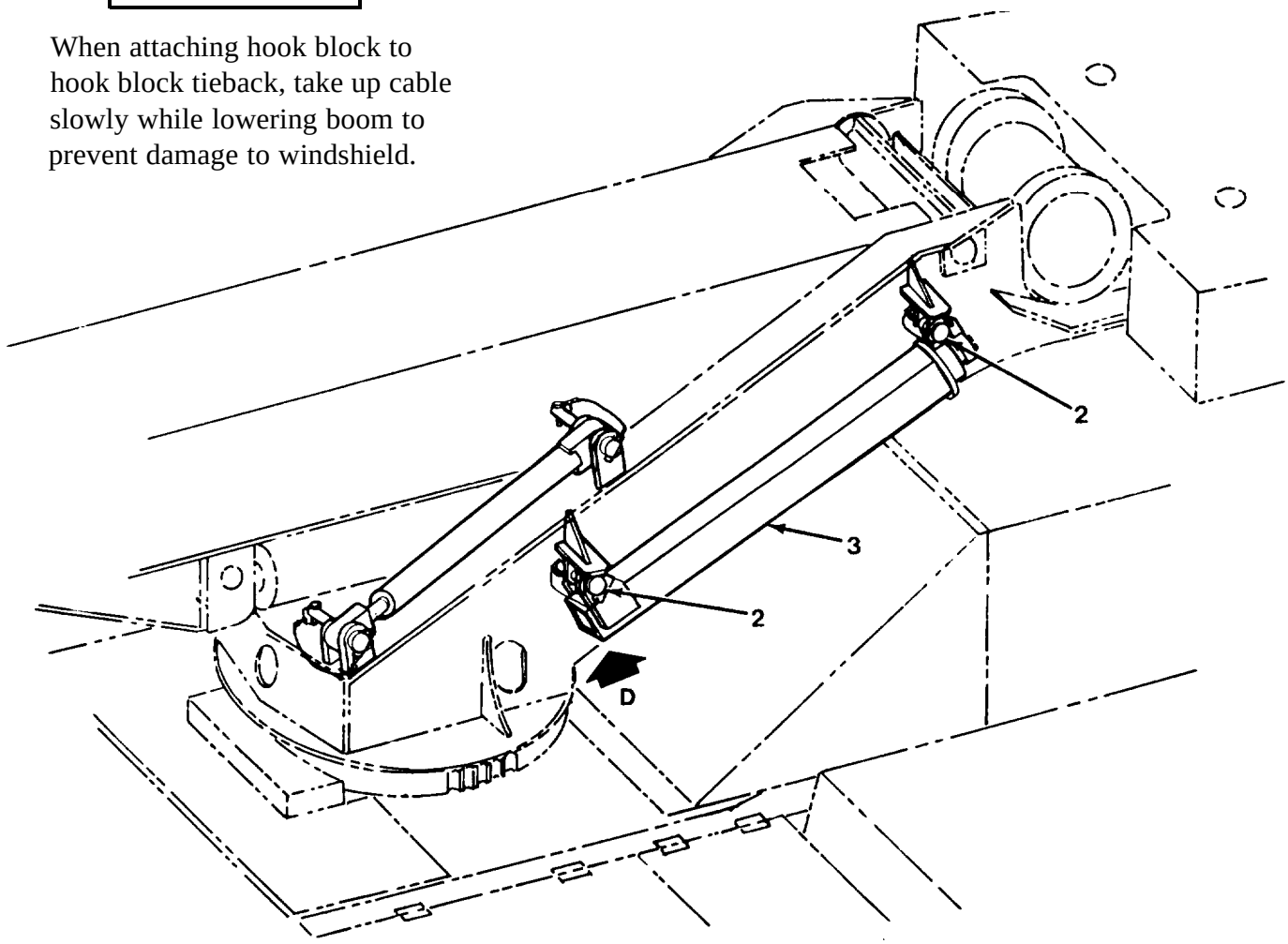

Figure 5-4. *Storage Location D*

TOOLS AND PARTS FOR SECTIONALIZATION

REF	TOOL	USE	QTY
1	HOSE H-10, H-11	Winch extension hoses	2
2	TORQUE MULTIPLIER w/reaction bar, 3/4 drive, 1/2 input	4 to 1 mechanical advantage for torquing swing bearing capscrews	1
3	SHORT EXTENSION, 3/4 drive	Use with torque multiplier	1
4	LONG EXTENSION, 3/4 drive	Use with torque multiplier	1
5	EXTENSION BAR	Use with breaker bar and torque wrench	1
6	36 mm SOCKET	Swing bearing capscrews	1
7	TORQUE WRENCH, 1/2 drive	Torquing swing bearing capscrews	1
8	REDUCER, 3/4 f to 1/2 m	Adapt extension to torque multiplier	1
9	HAMMER	All purpose use	1
10	TAPERED PUNCH	All purpose use	1
11	PLIERS	All purpose use	1
12	ROPE	Tether boom tip	1
13	ADAPTER, 1/2 f to 3/4 m	Adapt torque wrench to extensions	1
14	WOODEN WEDGE	Wedge winch cable	1
15	BREAKER BAR, 3/4	Removing swing bearing capscrews	1
16	PLASTIC CAP -10	Cap hoist connectors on manifold	2
17	PLASTIC PLUG -10	Plug hoist hoses	2
18	PLASTIC CAP -12	Cap extend-retract connectors on manifold	2
19	PLASTIC PLUG -12	Plug extend-retract hoses	2
20	PLASTIC CAP -16	Cap winch connectors on manifold	2
21	PLASTIC PLUG -16	Plug winch hoses	2
22	BAG	Base plate protector	1
23	WRENCH	Axle oscillation	1
24	PLATE	Hook block	1
25	PIN, HAIR	Secure extension bar to breaker bar /torque wrench	1
26	ALLEN WRENCH -6 mm	Anti-two block counterweight	1
27	TUBE	Boom support assembly	1

Also use the basic issue tools as required from pages 1-25 and 1-26 of this manual.

Section II
Transportability

As required by the procurement specification, provisions are included on the LRT 110 Crane for land, air, marine and rail transportation. Figure 5-44 illustrates the weight distribution and location of slinging eyes, tiedown lugs and towing lugs.

Land Transport

The LRT 110 Crane may be driven on public roads (refer to Vehicular Operation, page 4- 18). Normal land transport should be accomplished by hauling on a truck or trailer.

LRT 110 Crane Towing Procedure for Emergency Recovery Only

This towing procedure is to be used for emergency recovery only, such as a dead engine or any other breakdown unabling the LRT 110 Crane to be moved under its own power. Refer to page 4-56 for "Emergency Load Lowering" to return the LRT 110 Crane to a travel mode for towing procedures. Do not tow the LRT 110 Crane in any convoy or troop movement by this procedure. For convoy or troop movement, transport on a flatbed truck or trailer. To prepare the vehicle for towing:

1. Position the boom over the front in the travel position to prevent engagement of the rear axle lockout.

CAUTION

When attaching hook block to hook block tieback, take up cable slowly while lowering boom to prevent damage to windshield.

2. Attach the hook block to the hook block tieback with enough tension to take the slack out of cable.

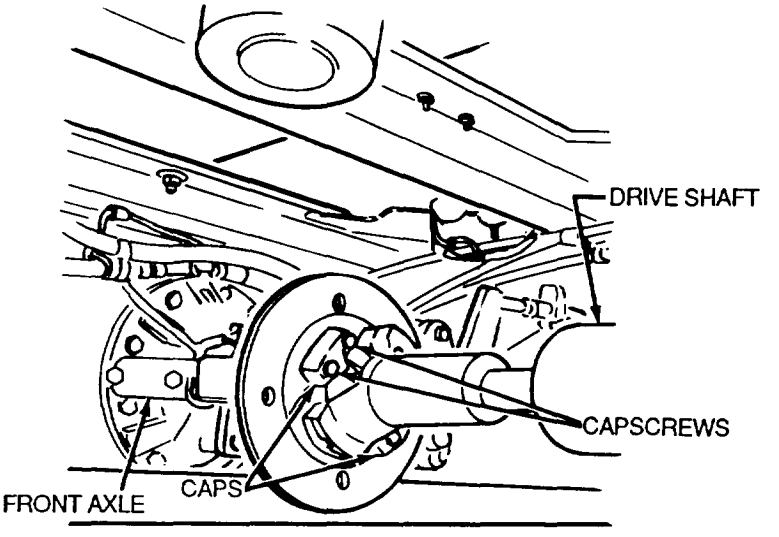

Figure 5-43 *Drive Shaft*

CAUTION

If the LRT 110 Crane is to be towed a distance of more than 1 mile (1.6 km) and/or at speeds greater than 3 mph (4.8 km/h), the front driveshaft must be disconnected from the front axle. As an alternative to disconnecting the driveshaft, if engine is operable, engine may be started and allowed to idle during the towing process. This will circulate lubricant in the transmission, lubricating the clutches during the towing operation. Failure to disconnect the driveshaft or to run engine will cause internal damage to the transmission as the vehicle is towed.

3. Disconnect the driveshaft by removing four capscrews and two caps (Figure 5-43). The driveshaft must be disconnected from the front axle and secured to a frame cross-member to prevent it from contacting the

rotating axle input yoke or ground while the vehicle is being towed. The spider bearing caps must be taped or wired together to prevent them from falling off and being lost.

4. Place the two-wheel/four-wheel drive shift lever, located at right of operator's seat, in the two-wheel drive position to prevent damage to the transmission during towing.

CAUTION

The tow bar MS500048 is the only tow bar to be used on this vehicle. If not available, see organizational maintenance. Failure to follow this procedure could cause damage to equipment.

5. Attach tow bar to lugs on outrigger and to towing vehicle.

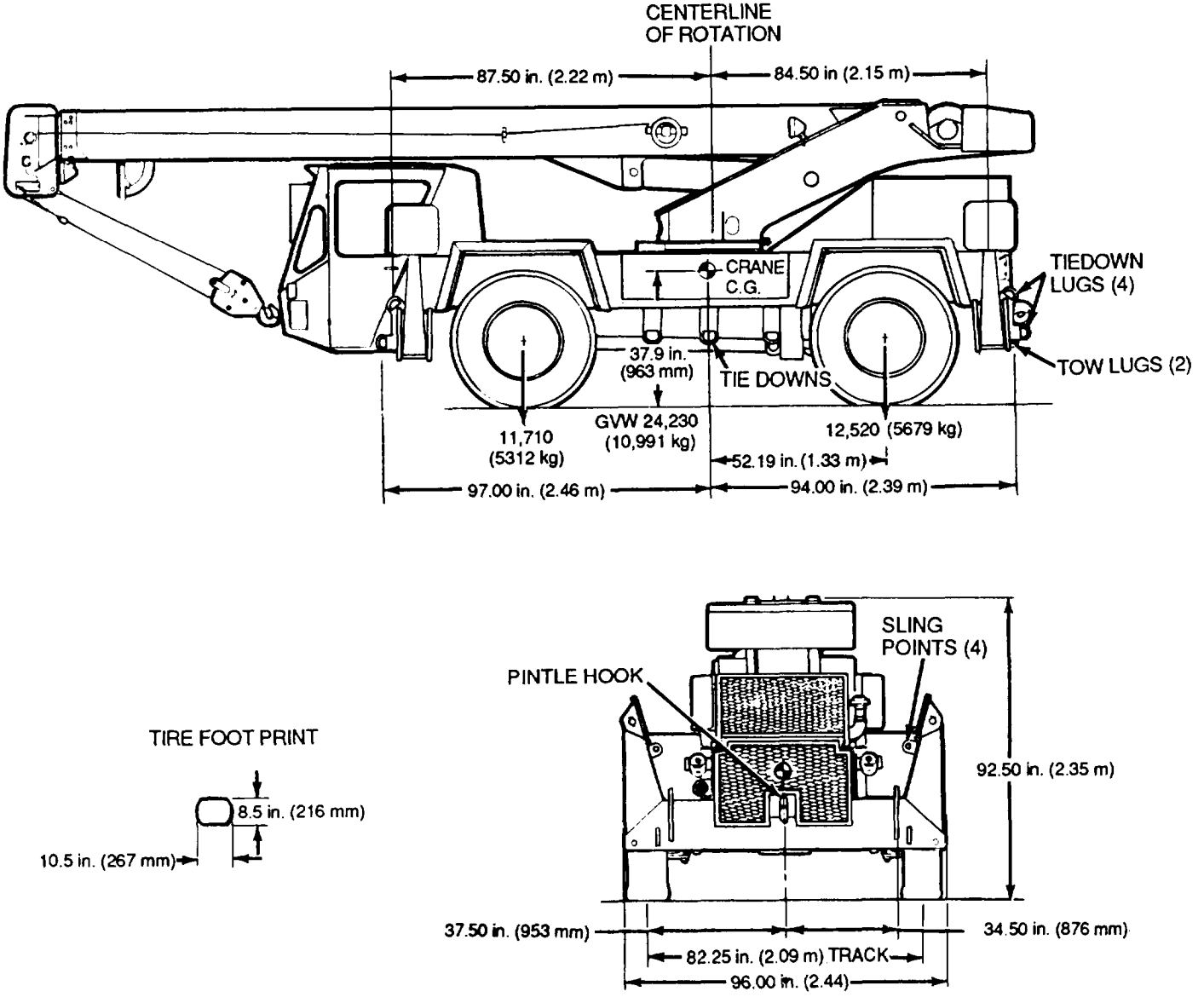

Figure 5-44 *Preparation for Travel*

6. Release the parking brake in the operator's cab by pulling up lever to release it. If the vehicle's electrical power is available, turn on emergency four-way flashers.

   The vehicle may now be towed at speeds up to 20 mph (32 km/h) (depending on existing conditions) for whatever distance is necessary. When making turns, make them as wide as possible (no sharp turns) at no more than 5 mph (8 km/h).

Air Tranport

The overall height of the LRT 110 Crane allows for transport without disassembly by C-5, C-141 and C-130 aircraft. Prepare the LRT 110 Crane as follows:

1. Retract the boom and lower it over the rear of carrier (Figure 5-45).

CAUTION

Apply only enough tension to the cable to take up the slack. Failure to follow this procedure could cause damage to equipment.

2. Use the link in the tool box to connect the hook block on the rear outrigger. With the winch, take up the slack in cable.

3. **Refer to TM55-3810-01-165 -14, Transportability Guidance for the Crane, 7-5 Ton, Rough Terrain, Koehring, Type 1, {NSN 3810-01-165-0646}, Type 2 {NSN 3810-01-165-0467} and the shipping data plates for tiedown requirements.**

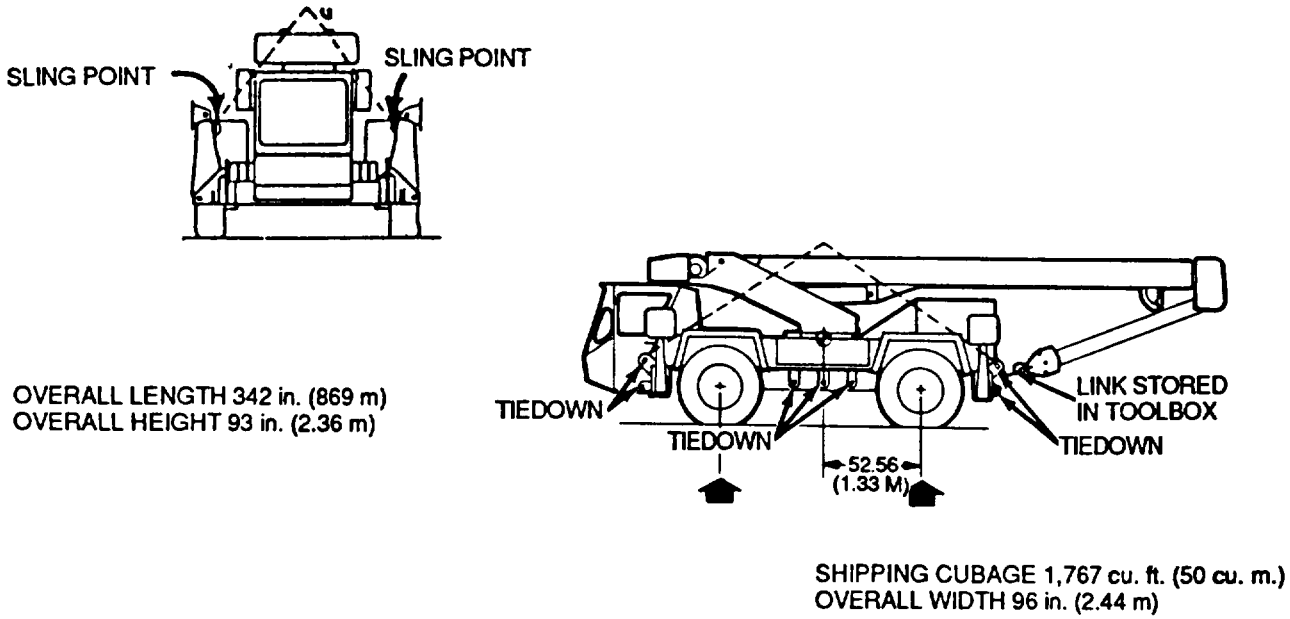

Figure 5-45 *Air Transport Tiedowns*

Rail Transport

Prepare the LRT 110 Crane for rail transport as follows:

WARNING

Weight of the hook block is approximately 235 lb (107 kg). Use adequate lifting equipment and properly support the hook block. Do not lift over personnal or let personnel walk underneath suspended. Failure to follow this procedure could cause DEATH or serious injury.

1. Using hoist and sling, remove the hook block from cable. Store it in the tool box and block it to prevent it from moving.

2. Retract the boom and lower it over the front. Wind cable back on drum, and wire socket down to prevent cable from loosening on winch drum.

3. Install a 1/2 in. 6x19 IWRC cable around load sheave and hook block tieback.

4. **Refer to TM55-3810-165-14 Transportability Guidance for the Crane, 7.5 Toni Rough Terrain. Koehring, Type 1, {NSN 3810=01-165-0646}, Type 2, {NSN 3810-01-165-0467} and the shipping data plates for tiedown requirements.**

5. Place the fuel shut-off on the rear wall of cab in the off position. Put the transmission shift lever in center (neutral) position, and release the parking brake

6. Remove all loose tools and equipment from the operator's cab. Stow and secure all tools and equipment in the tool box.

7. Band the tool and battery box lids shut.

Marine Transport

For loading aboard ship, the LRT 110 Crane may be slung in a horizontal attitude from lifting eyes on ends of outrigger boxes. Figure5-46 shows slinging geometry, indicating sling apex of the vehicle's center of gravity. If provisions exist, the LRT 110 Crane may be driven aboard the ship in a forward or backward direction. Once aboard, the LRT 110 Crane may be maneuvered into tight quarters by using the crab steering capability. Tie down the vehicle as required using tiedown lugs provided.

Helicopter Transport

1. The LRT 110 Crane must be "sectionalized' in two sections according to the instructions found in Chapter 5, Section 1.

2. Attach the slings to the lifting eyes provided on the outrigger beams of the carrier, and on the boom and upperstructure.

3. After delivery, reassemble the LRT 110 Crane, following instructions found in Chapter 5, Section I.

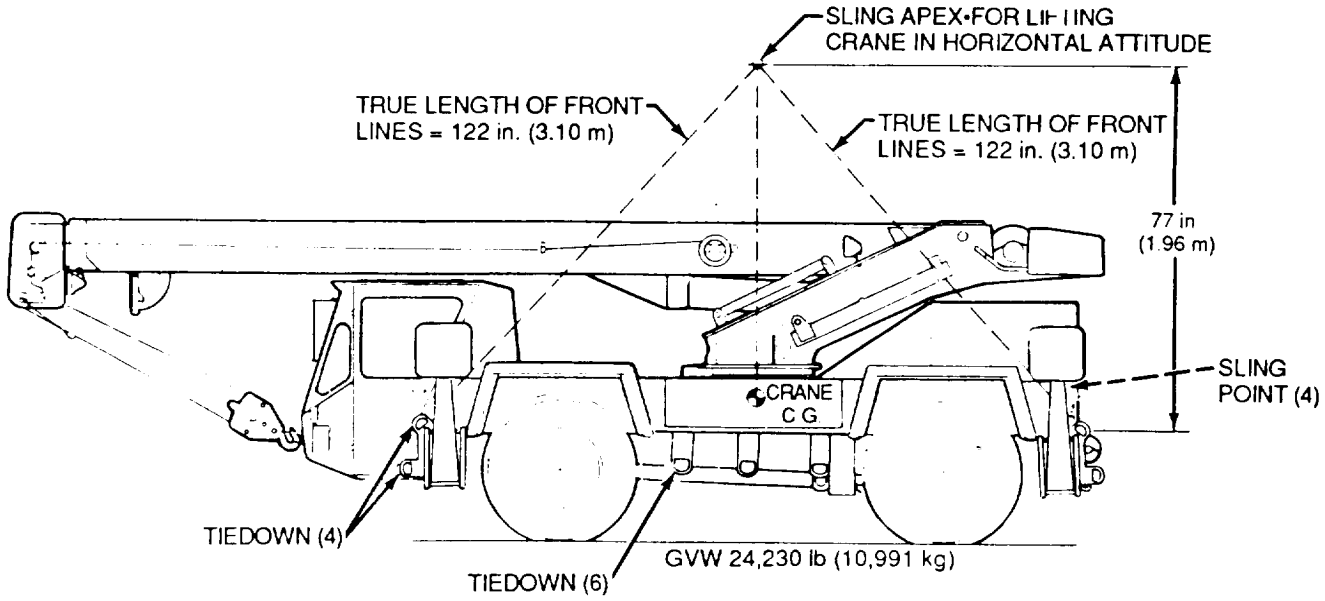

Figure 5-46 *Marine Transport*

APPENDIX A

Preparation of a New LRT 110 Crane for

Conduct the following checks before putting a new crane into operation (Figure A-1):

Engine: Check the oil level, coolant level and that all clamps on the air intake system are tight. Check that all filters are installed. Look for oil leaks around the engine. Oil level is to be maintained between ADD and FULL as indicated on the dipstick.

Transmission: Check transmission oil level dipstick. Oil level is checked with the engine running at idle speed, transmission in neutral and oil warm (160 to 190 degrees F [71 to 88 degrees C]). Oil should be at FULL line on dipstick.

Drive Shafts: Visually check the connecting capscrews and drive shafts for damage. Examine the parking brake disc and brake pack. Check the function of the brake.

Axles: Visually check all attaching bolts. Check the differentials and hub drives for lubricant levels. Visually check the steering cylinders and tie rods for damage. Check to be sure the torque on all wheel nuts is 450 to 500 1b-ft (610 to 678 N•m). Visually check tires for damage, and verify tire pressure. Tire pressure should be 90 psi (620 kPa).

Swing Gear Box: Check lubricant level in the swing gear box.

Winch: Check oil level, and that the vent is free to open.

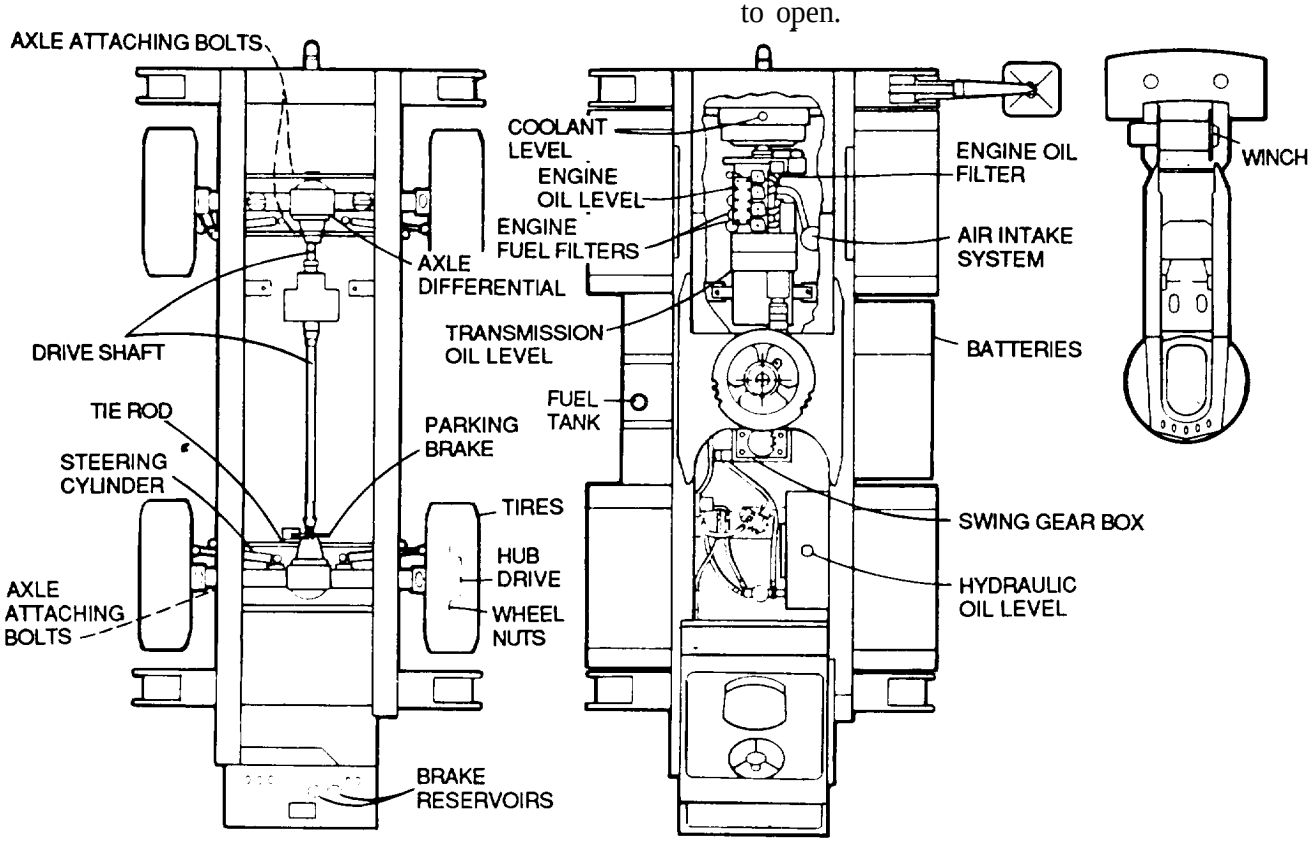

Figure A-1. *Loaction of check Points*

Check fuel in the fuel tank.

Check hydraulic oil level in the reservoir.

Check all hydraulic components and fittings for oil leaks.

Check batteries for electrolyte level and that all battery connections are tight and not corroded.

Check brake fluid in brake reservoir.

Lubricate the LRT 110 Crane according to the lubrication chart found in Appendix B up to and including the two weeks (80 to 100 hours).

Start the engine and check the gauges while running at low idle rpm. When engine temperature reaches the operating temperature of 190 degrees F (88 degrees C), increase the rpm and continue to monitor the gauges, making sure everything is functioning properly. Shut engine off!

If not already on the LRT 110 Crane, install the cable, hook block and anti-two block counterweight according to the instructions found in Chapters 2 and 4. When all checks are completed and the LRT 110 Crane is reeved, the operator should familiarize himself with the controls and operate the LRT 110 Crane at half throttle to gain experience.

Special Break in Requirements for New LRT 110 Cranes.

These requirements are to be performed after indicated hours of service.

8 hours: Torque wheel nuts to 450 to 500 lb-ft (610 to 678 N ·m) for a 2-week period.

20 hours: Drain, change filter and refill the transmission with new fluid.

40 hours: Make an initial replacement of the hydraulic return line filter.

100 hours: Do the following:

1. Drain and change winch lubricant.

2. Tighten the swing bearing capscrews. The 18 capscrews in the outer race hold the upperstructure to the bearing. The 22 capscrews in the inner race hold the bearing to the carrier. Torque all 40 capscrews to 722 lb-ft (979 N •m). Torque winch base mounting capscrews to 249 lb-ft (338 N •m). Torque capscrews of counterweight to 845 lb-ft (1,146 N •m).

APPENDIX B

Lubrication Instructions

Oil levels are to be checked with the LRT 110 Crane parked on a level surface in transport position. Check while the oil is cold, unless otherwise specified.

On plug-type check points, the oil levels are to be at the bottom edge of the check port. Over-lubrication of nonsealed fittings will not harm the fittings or components. Under-lubrication will lead to a shorter lifetime.

On sealed U-joints, care must be exercised to prevent rupturing seals, Fill only until expansion of the seals becomes visible.

Items not equipped with grease fittings, such as linkages, pins, and levers, should be lubricated with lubricating oil MIL-L-2104 once a week. Oil, applied sparingly, will provide the necessary lubrication and help prevent the formation of rust. Grease fittings that are worn and will not hold the grease gun, or those that have a stuck check ball, must be replaced. Where slide pads are used, cycle the boom and relubricate to insure complete lubrication of the entire wear area.

All lubrication and check time intervals are based on hours of operation under average working conditions:

- Daily or 8 hours, whichever comes first.
- Weekly or 40 hours, whichever comes first.
- Two weeks or 80 to 100 hours, whichever comes first.
- Three months or 250 hours, whichever comes first.
- Four months or 500 hours, whichever comes first.
- Six months or 1,000 hours, whichever comes first.
- Yearly or 1,500 to 2,000 hours, whichever comes first.

Time Intervals - Unusual Conditions

The LRT 110 Crane will require extra service and care when operated under unusual conditions. High or low temperatures, long periods of hard use and continued use in sand, water, mud or snow will break down the lubricants. Add or change lubricants more often under these conditions. However, during long periods when the crane is not in use, the service intervals can be lengthened.

Turntable Gear and Pinion Gear Teeth

WARNING

Never apply grease to turntable gear while the upperstructure is in motion. Failure to follow this procedure could cause DEATH or serious injury.

Gear teeth must be lubricated with a saturated brush or swab. Grease a segment; stand clear, swing the upperstructure 10 degrees and grease another segment. Repeat until entire ring gear is coated.

WARNING

No personnel are permitted on the deck while rotating upper-structure. Failure to follow this procedure could cause DEATH or serious injury.

Lubricate swing bearing through the grease fitting on the inside of cab while rotating the upperstructure.

Cable Lubrication

During fabrication, ropes receive lubrication; the kind and amount depending on the rope's size, type, and anticipated use. This in-process treatment will provide the finished rope with ample protection for a reasonable time if it is stored under proper conditions. But, when the rope is put into service, the initial lubrication may be less than needed for the full useful life of the rope. Because of this possibility, periodic applications of a suitable rope lubricant are necessary. The important characteristics of a good wire rope lubricant are as follows:

1. It should be free from acids and alkalis.

2. It should have sufficient adhesive strength to remain on the ropes.

3. It should be of viscosity capable of penetrating the interstices between wires and strands.

4, It should not be soluble in the medium surrounding it under the actual operating conditions.

5. It should have a high film strength.

6. It should resist oxidation.

WARNING

- Dry cleaning solvent P-D-680 used to clean parts is toxic and flammable. Use only in well ventilated areas and avoid contact with eyes, skin or clothing. Do not breath vapors. Wear the proper protective clothing and equipment: goggles or safety glasses, face shield and gloves. Do not use near sparks or open flames and do not smoke while using it. Failure to follow these procedures could cause SERIOUS INJURY.

- Compressed air used for cleaning purposes must not exceed 30 psi (207 kPa). Safety glasses must be used when cleaning parts. Failure to follow this procedure could cause SERIOUS INJURY.

Before applying lubrication, accumulations of dirt or other abrasive material should be removed from the rope. Cleaning is accomplished with a stiff wire brush and dry cleaning solvent P-D-680, and dried with compressed air. Immediately after it is cleaned, the rope should be lubricated. When it is normal for the rope to operate in dirt, rock or other abrasive material, the lubricant should be selected with great care to make certain that it will penetrate and, at the same time, will not pick up any of the material through which the rope must be dragged. As a general rule, the most efficient and most economical means to do cable lubrication/protection is by using some method or system that continuously applies the lubricant while the rope is in motion. Many techniques are used, including the continuous bath, dripping, pouring, swabbing, painting, and where circumstances dictate, automatic systems can be used to apply lubricants either by a drip or pressure spray method (Figure B- 1).

The arrows in the illustration indicate the direction in which the rope is moving.

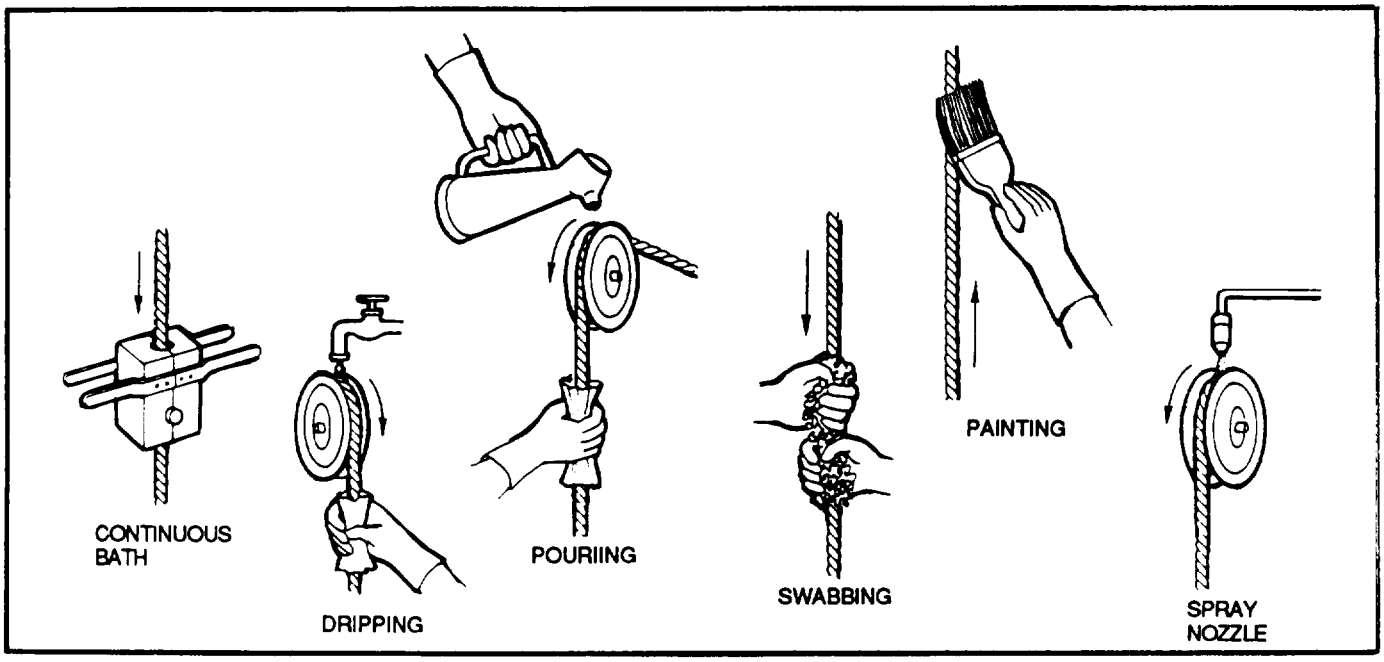

Figure B-1. *Methods of Applying Lubrication*

LUBRICATION LRT 110

CHK CHECK
D/R DRAIN & REFILL
LUB LUBRICATE
DIPSTICK
CHANGE FILTER

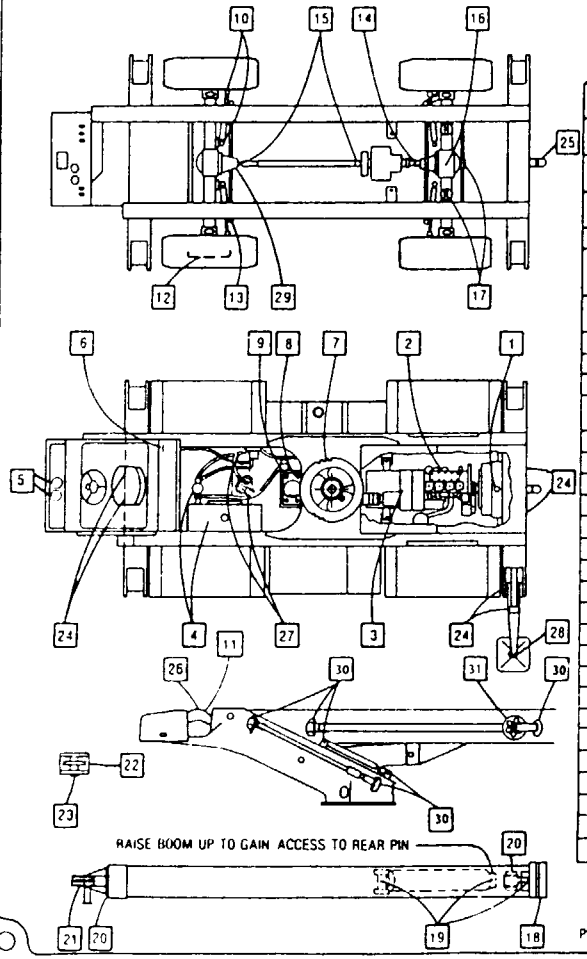

DAILY (8 HOURS)	WEEKLY (40 HOURS)	TWO WEEKS (80 – 100 HOURS)	THREE MONTHS (250 HOURS)	FOUR MONTHS (500 HOURS)	SIX MONTHS (1000 HOURS)	YEARLY (1500 – 2000 HOURS)	REF.	DESCRIPTION	QTY.	NO.	LUBRICANT	TEMPERATURE RANGE
CHK			CHK			D/R	1	COOLING SYSTEM	28 QT.	1	ANTI-FREEZE, MIL-A-46153 MIXTURE 50% BASE/50% WATER	-34°F AND ABOVE
CHK ρ			D/R				2	ENGINE & FILTER	10 QT + 1 QT. FILTER	1	MIL-L-2104, GRADE 15W-40 MIL-L-46167	-10°F AND ABOVE BELOW -10°F
CHK ρ				D/R			3	TRANSMISSION	12 QT.	1	MIL-L-2104, GRADE 10W MIL-L-46167	-10°F AND ABOVE 0°F TO -65°F
CHK						D/R	4	HYDRAULIC RESERVOIR TOTAL SYSTEM	23.8 GAL. 45 GAL.	1	MIL-L-2104, GRADE 10W MIL-L-46167	0°F AND ABOVE 0°F TO -65°F
CHK							5	MASTER BRAKE CYLINDERS	AS REQ'D	2	MIL-B-46176, BRAKE FLUID	-55°F TO 131°F
		LUB					6	TURNTABLE RACE, LUBE FROM BACK OF OPERATOR CAB	20 SHOTS	1	MIL-G-10924, GREASE SWING UPPER UNIT WHILE GREASING CONSULT OPERATOR'S MANUAL	-65°F TO 250°F
LUB							7	TURNTABLE GEAR AND PINION GEAR TEETH	AS REQ'D	1	MIL-G-10924 GREASE	
		CHK				D/R	8	SWING REDUCTION UNIT	3 QT	1	MIL-L-2105, GRADE 80W90	-65°F AND ABOVE
	LUB						9	TOP BEARING	1 SHOT	1	MIL-G-10924, GREASE	-65°F TO 250°F
	LUB						10	STEERING CYLINDER PINS	PURGE	4		
			LUB				11	WIRE ROPE	AS REQ'D	1	MIL-L-2104, GRADE 15-40 MIL-L- 46167	-10°F AND ABOVE BELOW -10°F
					CHK	D/R	12	AXLE HUB DRIVE	3 QT.	4	MIL-L-2105, GRADE 80W90	-65°F AND ABOVE
	LUB						13	TIE ROD ENDS	PURGE	4	MIL-G-10924, GREASE	-65°F TO 250°F
		LUB					14	DRIVE SHAFT, REAR	PURGE	3		
		LUB					15	DRIVE SHAFT, FRONT	PURGE	3		
					CHK	D/R	16	AXLE DIFFERENTIAL	14 QT.	2	MIL-L-2105, GRADE 80W90	-65°F AND ABOVE
LUB							17	AXLE PIVOT & CYLINDERS	PURGE	6	MIL-G-10924, GREASE	-65°F TO 250°F
	LUB						18	BOOM PIVOT PIN	PURGE	2		
	LUB						19	BOOM CYLINDER BUSHINGS	PURGE	3		
	LUB						20	BOOM SLIDE PADS	AS REQ'D	4		
	LUB						21	BOOM TIP SHEAVES	PURGE	3		
	LUB						22	HOOK BLOCK SHEAVES	PURGE	1		
	LUB						23	HOOK BLOCK TRUNNION	PURGE	1		
	LUB						24	OUTRIGGER PINS	PURGE	12		
	LUB						25	PINTLE HOOK	PURGE	3		
		CHK			D/R		26	WINCH	2 QT.	1	MIL-L-2105, GRADE 80W90	-65°F AND ABOVE
	LUB						27	CONTROL DISCONNECTS	4 DROPS	3		-65° TO 250°F
	LUB						28	PAD PIVOT POINTS	AS REQ'D	4		
		LUB					29	BRAKE CALIPER PINS	AS REQ'D	4	MIL-M-7866, GREASE	
	LUB						30	PINS TYPE II ONLY	AS REQ'D	24	MIL-L-2104 GRADE 10W	
	LUB						31	SHEAVES TYPE II ONLY	AS REQ'D	3		

REFER TO MAINTENANCE MANUAL FOR DRAIN—REFILL PROCEDURES AND FOR ADDITIONAL LUBRICATION INFORMATION

INCREASE LUBRICATION FREQUENCY UNDER SEVERE OPERATING CONDITIONS.

12400-278

Figure B-2. *Lubrication Points*

PUBLICATION REFERENCES

PUBLICATION INDEXES

DA Pam 25-30	Consolidated Index of Administration Publications

FORMS

Refer to DA Pam 738-750, The Army Maintenance Management System (TAMMS), for instructions on the *use* of maintenance forms pertaining to the vehicle.

PUBLICATION REFERENCES

General

AR 310-2	Identification and Distribution of DA Publications and Issue of Agency and Command and Administrative Publications.
CTA 50-970	Expendable/Durable Items (Except Medical, Class V. Repair Parts, and Heraldic Items)
DA Pam738-750	The Army Maintenance Management System (TAMMS)
FM 5-20	Camouflage
FM 9-207	Operation and Maintenance of Army Materiel in Extreme Cold Weather 0 to -65° F (TO 36-1-40)
FM 20-22	Vehicle Recovery Operations
FM 21-11	First Aid for Soldiers
FM 21-60	Visual Signals
FM 31-70	Basic Cold Weather Manual
FM 31-71	Northern Operations
FM 90-3(HTF)	Desert Operations (How to Fight)
FM 90-6(HTF)	Mountain Operations (How to Flight)
MIL-M-63042C(TM)	Manuals, Technical: Procedures for Obstruction of Equipment to Prevent Enemy Use
TC 25-7	Training Management Skills, Unit Development
TM 5-331 A	Utilization of Engineer Construction Equipment: Volume A: Earthmoving, Compaction, Grading and Ditching Equipment
TM 9-238	Deepwater Fording of Ordnance Materiel
TM 43-0139	Painting Instructions for Field Use

Vehicle

FM 21-306	Manual for Tracked Combat Vehicle Driver
LO 5-2350-262-12	Lubrication Order for Armored Combat Earthmover (ACE), M9
TB 750-651	Use of Antifreeze Solutions and Cleaning Compounds in Engine Cooling Systems
TM 5-2350-262-10-HR	Hand Receipt Manual Covering End hem/Components of End Item (COEI), Basic Issue hems (BII), and Additional Authorization List (AAL) for Armored Combat Earthmover (ACE), M9
TM 55-3810 -01-165 -14....	Transportability Guidance For The Crane, 7.5 Ton, Rough Terrain, Koehring Type 1, (NSN 3810-01-165-0646), Type 2 (NSN 3810-01-165-0647) .
TB 5-3810-305-15	Warranty Technical Bulletin For: Crane, 7.5 Ton, Rough Terrain, Koehring Type 1 and 2.

TM 9-6140-200-14 . . . . . .Operator's Organizational, Direct Support and General Support Maintenance Manual for Lead-Acid Storage Batteries: 4HN, 24 V, MS75047-1; 2HN, 12 V; 6 TN, 12 V

TM 55-2350-262-14 . . . . . .Technical Manual Transportability Guidance Armored Combat Earthmover. M9

Night Vision Equipment

TM 11-5855-236-10 . . ..."... . . Operator's Manual for Night Vision Goggles, AN/PVS-5 and AN/PVS-5A

TM 11-5855-238-10-HR . . . . . Hand Receipt Manual Covering End Item/Components of End Item (COEI), Basic Issue Items (Bll), and Additional Authorization List (AAL) for Night Vision Goggles AN/PVS-5 and AN/PVS-5A

Chemical, Biological, and Nuclear

FM 3-4 . . . . NBC Protection

FM 3-5 . . . . . NBC Decontamination

FM 3-6 . . . . . Field Behavior of NBC Agents (Including Smoke and Incendiaries)

TF 3-4899 . . . . . CBR Decontamination, Unit Level, MCB Proficiency

TM 3-4230-214-12&P . . . . . Operator's and Organizational Maintenance Manual Including Repair Parts and Special Tools Lists: Decontaminating Apparatus, Portable DS2, 1 1/2 Quart. ABC M 11

TM 34240-280-10. . . . . Operator's Manual: Mask. Chemical-Biological, Aircraft, ABC-M24 and Accessories: Mask. Chemical-Biological. Tank, M25 and Accessories: Mask. Chemical-Biological. Tank, M25A1 and Accessories

TM 34240-282-L . . . . . List of Applicable Publications (LOAP) 12 and 20 CFM Gas-Particulate Filter Units

TM 36910-227-10 . . . . . .Operator's Manual: Training Set, Chemical Agent Identification: Simulants, M72A2

TM 43-0001 -26-1 . . . . . .Army Equipment Data Sheets, Chemical Defense Equipment

Communications

SB 11-131 . . . . . .Vehicular Radio Sets and Authorized Installations

TM 11-5820-498-12 . . . . . Operator's and Organizational Maintenance Manual: Radio Sets AN/VRC-53. AN/VRC 64. AN/VRC-125, and AN/GRC-160

TM 11-5820-498-12-HR . . . . . Hand Receipt Manual Covering End Item/Components of End Item (COEI), Basic Issue Items (Bll), and Additional Authorization List (AAL) for Radio Sets AN/VRC-53, AN/VRC-64, AN/GRC-125, and AN/GRC-160

APPENDIX D

BASIC ISSUE ITEMS
TYPE I TYPE II

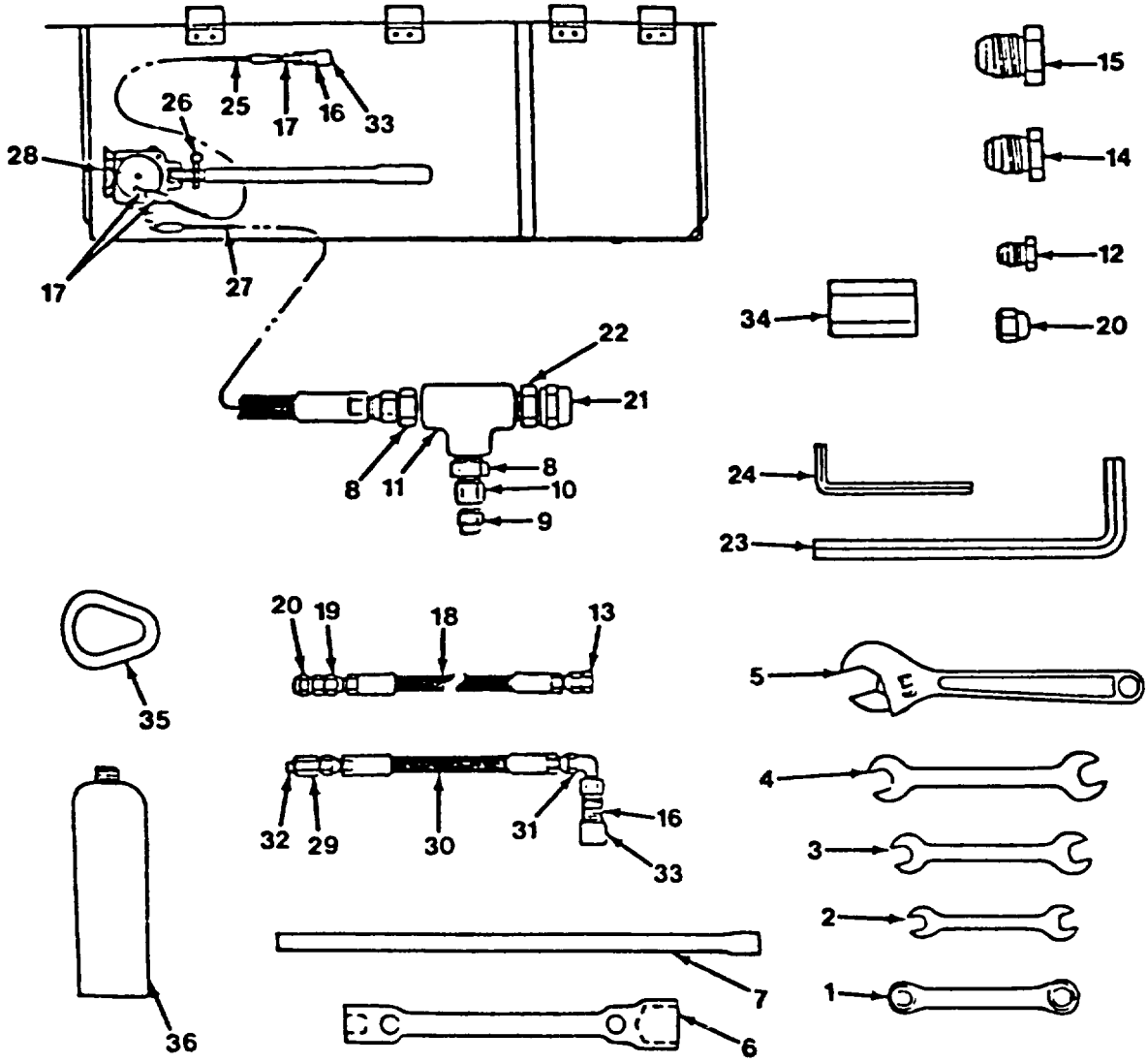

APPENDIX D

COMPONENTS OF END ITEM AND BASIC ISSUE ITEMS LIST

Crane. Wheel Mounted. NSN 3810-01-165-0646-Non-Sectionalized

Type 1&2

ILLUST. NO.	NSN	DESCRIPTION/CAGEC and PART NO.	USABLE ON CODE	QTY.
1.	5120-01-145-7452	ratchet wrench/55719/P/N R2428 3/4"X7/8"	105-106	1
2.	5120-00-277–8301	open end wrench/55719/P/N S2022 B 9/16"X5/8"	105-106	1
3.		wrench/55719/P/N V02022 5X8"x 11/16"	105-106	1
4.	5120-00-240-5609	Open end wrench/19207/P/N 11655789-4 3/4"X7/8"	105-106	1
5.	5120-00-264-3796	adj. wrench/55719/P/N DA212 12"	105-106	1
6.	5120-00-293–1289	socket wrench/09386/P/N 18806	105-106	1
7.	5120-00-266-1927	spanner wrench handle/03683/P/N 17899	105-106	1
8.	4730-00-079-8814	straight adapter/90906/P/N MS51500A6-83 8 to -6	105-106	1
9.	5310-01-212–6134	plain nut/01276/P/N 210292-4S -4	105-106	1
10.	4730-00-706-8711	tube reducer/01276/P/N 221501-6-4S -6 to -4	105-106	1
11.	4730-00-203-5266	pipe tee/01276/P/N 2090-8-8S -8	105-106	1
12.	4730-01–271–3751	tube plug ftg./01276/P/N 900599–4 –4	105-106	1
13.	4730-01-247–2611	tube plug ftg./01276/900599-6S –6	105-106	1
14.	5365-01-280-6488	machine plug/17335/P/N 2408-10 –10	105-106	1
15.	4730-01–270-9651	tube plug ftg./57760/P/N 03CP-12 –12	105-106	3
16.		coupling half/01276/P/N FD(90-1021–04-04	105-106	2

17.	4730-(00-955- 1559	straight:adapter/96906/P/N MS51500A6 –6 to -4	105-106	3
18.	4720-01-267-4258	hose assy./81495/709 1272–166	105-106	1
19.	4730-00-781–6089	tube nipple/96906/P/N MS51501A65 –6 to –6	105-106	2
20.	5310-00-257-6177	plain nut/01276/P/N 210292-6S	105– 106	2
21.	4730-00-647-3311	tube cap/87373/P/N 306CP–12 –12	105-106	2
22	4730-01-297-9072	straight adapter/57760/P/N 0103-8-12 -12 to -8	I 05-106	1
23	5120-00-198-5409	socket key wrench/57719/P/N ALW10 5/16”	105-106	1
24.	5120-00-198–5392	socket key wrench/16786/P/N P848000210 5/32’’–hex	105–106	1
25.	4720-01–262–5215	hose assy./81495/P/N709 1270-78	105–106	1
26.	5315-01-267-2927	retaining pin)96652/P/N 1200-03125-02000	105-106	1
27.	4720-01–266-4240	hosea assy./81495/P/N 709 1270-142	105–106	1
28.	4320-01-126-0014	hyd. ram pump/19184/P/N HP-121-DA-TL	105-106	1
29.		adapter/57760/0203-4-6	105– 106	1
30.	4720-01-262-5211	hose assy./81495/P/N 709–1272–18	105-106”	1
31.	4730-00-812-7999	pipe to tube elbow/81343/P/N 6-4070202	105-106”	1
32.	4730-01-266-1369	pipe plug/81492/P/N 1219–137 -4	105-106”	1
33.	5340-01-269-1701	protective cap plug/23540/P/N 249–2	105-106”	2
34.	2590-01-267-1359	special adapter/81495/709-4227	105-106	1
35.	3040-01–285–2914	link/81495/P/N 37881	105–106	1
36.	2910-00-646-9727	engine cartridge/53203/P/N 020030	105-106	1

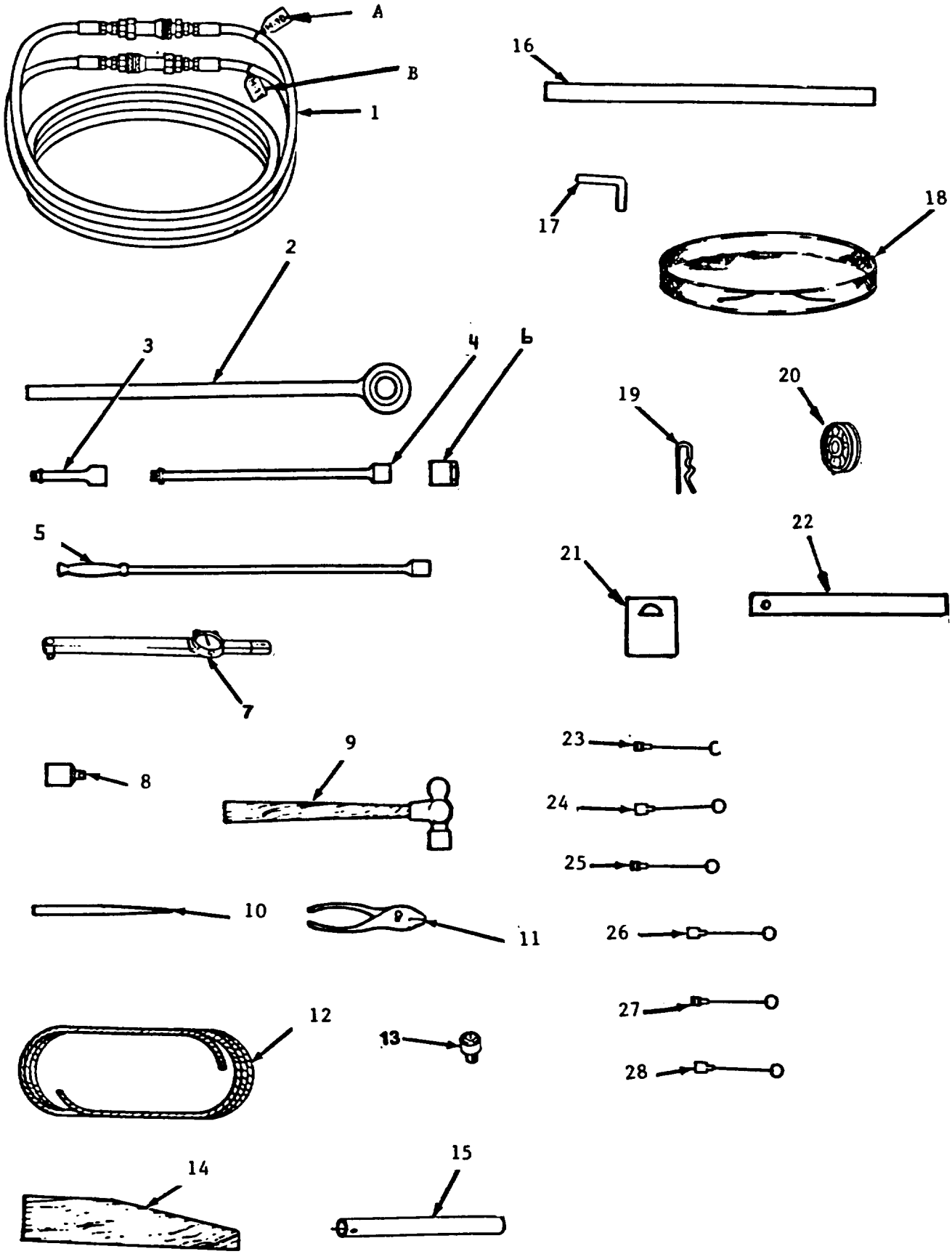

Type II Sectionalization Tool Kit

Appendix D

Basic Issue Items

Crane, Wheel Mounted, Hydraulic

NSN 3810–01–165-0647 Sectionalized. Type II

Type II Basic Issue Items (BII) . include the BII for the Type I LRT 110 in addition to the below listed BII.

Illust. No.	NSN	Description/CAGEC and Part No.	Usable on Code	Qty
1 .	4720-01-274-1841	hose,extension, h–11, h–11	106	2
	A. 9905-01-268-7581	h–10 label	106	1
	B. 9905-01-268-7582	h–11 label	106	1
2	5120-00-509–9092	torque multiplier/55719/P/N GA184A	106	1
3.	5120–01-030-1187	5" extesion.drive/55719/P/N GA184A	106	1
4.	5120-00-227–8079	16" extension, 3/4" drive/55719/P/N LI22	106	1
5.	5120-01–278–7281	breaker bar 3/4" drive/55719/P/N 1226-57	106	1
6 .	5120–01-119-4806	36MM socket/55719/P/N LDHM362	106	1
7.	5120-01-276-7016	torque wrench. 1/2" drive/81495/P/N TQR250	106	1
8.		adapter 3/4f to 1/2 MM/55719/GLA62	106	1
9 .	5120-01-133-8880	hammer 55719)/P/N BPN 16B	106	1
1 0.	5120-00-272-8985	tapered punch/55719/P/N 1816A	106	1
11.	5120-00-223–7396	pliers/1495/P/N 1226-3	106	1
12.	4020-01-28-6173	rope/8149/P/N 12178–144	106	1
13.	5120-00–144-5207	adapter. 1/2f to 3/4 M/55719/P/N GLA12	106	1
14.	5510-01-276-9242	wooden wedge/81495/P/N 709 1985	106	1
15.		extension bar/81495/P/N 709 1977	106	1
16.		metal bar/81495/P/N 709 1977	106	1
17.		wrench.6MM/81495/P/N610 1039	106	1
18.	8105-01-286-0935	bag/81495/P/N 709 4324	106	1
19.	5315-01-284-9813	lock pin/3942 8/P/N 9017A114	106	1
20.	3020-01-26l–6856	groove pulley/81495/P/N 709A1565	106	1
21.	5365-01-276-7509	space plate/81495/P/N 709 1998	106	1

22.	3040-01-273-9314	connecting link/81495/P/N 709 1877	106	1
23.	5340-00-071-3836	protective cap/01276/P/N 5657-10	106	1
24.	4730-01-128-5831	protective plug/01276/P/N5659-10	106	1
25.	5340-00-071-3834	protective cap/01276/P/N 5657-12	106	1
26.	5354-01-013-1040	protective plug/01276/P/N 5659-12	106	1
27.	4730-01-246-8511	protective cap/01276/P/N 5657–16	106	1
28.	5340-01-239-8742	protective plug/01276/P/N 5659-16	106	1

Appendix E

Additional Authorized List(AAL)

Description	NSN	U/M	Qty
1.Helmut,Construction	8415-00-889-3767	Ea	2
2.Gogles,Protective	4240-00–252-3776	Pr	2
3.Grease Gun	4930-00-253-2478	Ea	1
4. Adapter,Grease Gun Flex	4930-00-288-1511	Ea	1
5. Bag,Pamphlet	7520-00-559-9618	Ea	1
6.Fire Extinguisher	4215-00-555-8837	Ea	1
7. Kit,Sign Vehicle	9909-00-565-6267	Ea	1
8. Kit,First Aid	6545-00-922-1200	Ea	1

WARNING

The pintle hook, NSN 2450-00-835-9093, is authorized for use on Aviation Support Unit Cranes only. The towing capacity of this pintle hook is 30,000 lbs.. This capacity is 10,000 lbs. less than the standard cranes pintle hook capacity of 40,000 lbs.. Failure to consider the lower capacity may result in death,in–jury, or damage to equipment.

NOTE

The smaller pintle hook, adapter aand capscrews are all required to support the Aviation Support Unit Crane.

9. Hook, Pintle	2540-00-835-9093	Ea	1
10.Adapter	2540-01–332-0108	Ea	1
11.Capscerws	5305-00-042-6417	Ea	4

OPERATOR/CREW

PREVENTIVE MAINTENANCE CHECKS AND SERVICES (PMCS)

GENERAL

Your Preventive Maintenance Checks and Services Table lists the inspections and care of your equipment required to keep it in good operating condition.

Record all deficiencies and shortcomings along with corrective action taken on DA Form 2404.

OPERATOR/CREW PREVENTIVE MAINTENANCE CHECKS AND SERVICES

1. The number column of your PMCS is the source for the number used on the TM Number Column on DA Form 2404.

2. The interval column **of** your PMCS Table tells your when to do a certain check of service.

   a. While you operate, perform your Before (B) PMCS. Always keep in mind the WARNINGS and CAUTIONS.

   b. While you operate, perform your During (D) PMCS. Always keep in mind the WARNINGS and CAUTIONS.

   c. Right after you operate, perform your After (A) PMCS.

3. The procedure column of your PMCS Table tells you how to do the required checks and services. Carefully follow these instructions. If you do not have the tools, or if the procedure tells you to, have unit maintenance do the work.

4. If your equipment does not perform as required, refer to the troubleshooting section in this manual for possible problems. Report any malfunctions or failures on the proper DA Form 2404 or refer to DA Pamphlet 738-750.

NOTE

The terms ready\available and mission capable refer to the same status: Equipment is on hand and is able to perform listed combat missions (see DA Pamphlet 738-750).

5. Equipment is not ready/available if column. This column tells you when and why your equipment cannot be used.

6. Always do your PMCS in the same order so it gets to be a habit. Once you've had some practice, you will spot anything wrong in a hurry.

7. When you do your PMCS, take along a rag or two.

8. While performing PMCS, observe WARNINGS and CAUTIONS preceding those operations which could endanger your safety or could result in damage to equipment.

WARNING

Dry cleaning solvent, P-D-680 is toxic and flammable. Wear protective goggles and gloves and use only in well ventilated area. Avoid allowing solvent to contact skin, eyes, and clothes, and do not breathe vapors. Do not use near open flame or excessive heat. If you become dizzy while using cleaning solvent, get fresh air immediately and get medical aid. If solvent comes in contact with skin or clothing; wash with water. If solvent gets in your eyes, flush with water and get medical aid immediately. Flash point of solvent is 138°F (59°C).

a. Keep it clean. Dirt, grease, oil and debris only get in the way and may cover up a serious problem. Clean as you work and as needed. Use dry cleaning solvent (P-D-680) to clean metal surfaces. Use soap and water when you clean rubber or plastic material.

b. Bolts, nuts, and screws. Check that they are not loose, missing, bent or broken. You can't try them all with a tool, or course, but look for chipped paint, bare metal or rust around bolt heads. Tighten any bolt, nut, or screw that you find loose.

c Welds. Look for loose or chipped paint, rust or gaps where parts are welded together. If you find a bad weld, report it to unit maintenance.

d. Electric wires and connectors. Look for cracked or broken insulation, bare wires and loose or broken connectors. Report damaged or loose wiring to unit maintenance.

Hoses and fluid lines. Look for wear, damage and leaks. Make sure clamps and fittings are tight. Wet spots show leaks but a stain around a fitting or connector can also mean a leak. If leakage comes from a loose fitting or connector, tighten the fitting or connector. If something is broken or worn out, report it to unit maintenance.

f. Vehicle must be on level ground in order to get correct fluid level measurement.

9. It is necessary for you to know how fluid leaks affect the status of your equipment. The following are definitions of the types/classes of leakage you need to know to be able to determine the status of your equipment. Learn and be familiar with them and REMEMBER - when in doubt, notify your supervisor.

Class I Seepage of fluid (as indicated by wetness or discoloration) not great enough to form drops.

Class II Leakage of fluid great enough to form drops, but not enough to cause drops to drip from the item being checked/inspected.

Class III Leakage of fluid great enough to form drops and fall from the item being checked/inspected.

CAUTION

Equipment operation is allowable with minor leakages (Class I or II). Of course, consideration must be given to the fluid capacity in the item/system being checked/inspected. When operating with Class I or II leaks, continue to check fluid levels as required on your PMCS. Class III leaks should be reported to your supervisor or unit maintenance. Equipment is not ready/available if any gasoline leak is present, whether Class I, II, or III (Reference AR 385-55).

OPERATOR/CREW PREVENTIVE MAINTENANCE CHECKS AND SERVICES

B - BEFORE D - DURING A - AFTER W - WEEKLY M - MONTHLY

ITEM NO	INTERVAL B	D	A	W	M	ITEM TO BE INSPECTED PROCEDURE: CHECK FOR AND HAVE REPAIRED, FILLED, OR ADJUSTED AS NEEDED	EQUIPMENT IS NOT READY/AVAILABLE IF
						NOTE: All Preventive Maintenance Checks and Services (PMCS) listed are based on DA PAM 750-40, Reliability Centered Maintenance (RCM) logic.	
						Perform "WEEKLY" as well as "BEFORE" PMCS if:	
						a. You are the assigned operator but have not operated the equipment since the previous week.	
						b. You are operating the equipment for the first time.	
						NOTE: During the warranty period, you must perform the PMCS in the manufacturer's commercial manual, in addition to this PMCS (APPENDIX C).	
						WARNING	
						Your safety, and the safety of others around you despends upon you using care, good judgement and a thorough knowledge in the operation of this machine. Know the position and functions of all controls before attempting to start/operate the equipment.	
						GENERAL:	
						a. Perform daily/weekly lubrication in accordance with (IAW) the manufacturer's lube chart (APPENDIX C).	
						b. When checking fluid levels, insure the equipment is on a level surface.	
						c. Perform a walk-around inspection of the vehicle. Check for fuel, oil, hydraulic and water leaks and damage to the equipment that would require a more detailed inspection.	
						d. Levers, pins, linkage, etc. not equipped with lubrication fittings should operate freely, and be free of rust.	
						e. Check for loose/missing nuts, bolts and cotter pins. Chipped/cracked paint around nuts/bolts may indicate loose hardware.	
						f. Check for cracked/broken welds. Cracked or chipped paint may indicate a damaged weld.	
						g. Listen for unusual noise from the equipment and erratic operation of controls/equipment during operation.	
1.	•					ENGINE:	
						a. Check for oil leaks at the valve cover gasket and oil cooler.	Any class III oil leak.
						b. Check for damaged/missing components.	Damage that renders a component inoperable.
						c. Check for a cracked block/head. (visually)	Any crack in the block/head.
						d. Check the engine oil level. Maintain the level between the "add 1 Qt." and "Full" mark on the dipstick.	Level below "add 1 Qt." mark on the dipstick.
2.	•					FUEL SYSTEM:	
						Check injectors, pump, lines/fittings and tank for leaks or damage. Fill fuel tank.	
3.	•					AIR CLEANER:	
	•					Check air cleaner element and service indicator for dirt. Clean as required.	Dirty element or cannister, red flag appears in service indicator Element missing
4.	•					CONTROLS: controls bind or won,t engage. Check controls for smooth movement, no binding, no excessive free play.	Controls bind or won't engage

OPERATOR/CREW PREVENTIVE MAINTENANCE CHECKS AND SERVICES

B - BEFORE D - DURING A - AFTER W - WEEKLY M - MONTHLY

ITEM NO	INTERVAL B	D	A	W	M	ITEM TO BE INSPECTED PROCEDURE: CHECK FOR AND HAVE REPAIRED, FILLED, OR ADJUSTED AS NEEDED	EQUIPMENT IS NOT READY/AVAILABLE IF
						NOTE: Outriggers and boom must be fully retracted before checking the hydraulic level.	
5.	•					HYDRAULIC RESERVOIR: Check hydraulic fluid level. Maintain the level at the Full mark on the dipstick.	
6.	•					FUEL/WATER SEPARATOR: Drain separator into a container, check for water in the fuel. Milky looking fuel indicates water in the fuel.	
						WARNING DO NOT remove the radiator cap when the radiator is hot/warm. DO NOT touch the radiator. Place your hand approximately 2-3 inches from the radiator top tank, if the tank feels hot/warm, DO NOT remove the radiator cap. Hot coolant in the radiator may cause severe injury to personnel.	
7.	•					RADIATOR a. Check coolant level. The level should be no lower than one (1) inch from the bottom of the filler neck.	
						b. Check hoses, lines and fittings, radiator core/tanks for leaks, cracks, damage or loose clamps.	Any class III leak.
8.	•					BELT: Check for loose, frayed or broken/missing belt.	Belt broken/missing.
9.	•					LIGHTS AND SIGNALS: Check all lights and turn signals for proper operation.	Lights INOP for nig operation.
						WARNING Electrolyte is extremely dangerous. Wear eye protection when checking batteries. Keep open flames, sparks and other heat sources away from batteries. Should electrolyte get splashed into eyes, flush immediately with water and seek medical attention ASAP. If electrolyte contacts skin, wash immediately.	
10.	•					BATTERIES: a. Check electrolyte level, contact maintenance if battery electrolyte is required.	Batteries will not crank engine.
						b. Check battery box and cables for corrosion/cleanliness. Contact maintenance to remove batteries if required.	
11.	•					TIRES: a. Visually check tires for severe cuts and obvious low pressure (Ref. TM 9-2610-200-20, Chapter 2). Tire pressure is 90 PSI.	
						WARNING Place transmission in neutral before starting engine.	
						NOTE: Transmission temperature must be 160°F to 190°F to check fluid level.	
12.	•					TRANSMISSION: a. Check transmission fluid level. Maintain level between "Add" and "Full" mark.	Fluid below add mark
						b. Check transmission and oil cooler for leaks.	Class III leak.

OPERATOR/CREW PREVENTIVE MAINTENANCE CHECKS AND SERVICES

B - BEFORE D - DURING A - AFTER W - WEEKLY M - MONTHLY

ITEM NO	INTERVAL B	D	A	W	M	ITEM TO BE INSPECTED PROCEDURE: CHECK FOR AND HAVE REPAIRED, FILLED, OR ADJUSTED AS NEEDED	EQUIPMENT IS NOT READY/AVAILABLE IF:
						WARNING Do not attempt to move the vehicle with the parking brake engaged. Check parking brake operation. Vehicle must not move with the brake engaged, engine at an idle and engine in forward gear.	
13.	•					BRAKES: a. Check reservoirs fluid level. Must be between "Max" and "Min" marks. Use silicone brake fluid only - DOT. 5/MIL-B-46176 b. Check brake pedal and brakes for proper operation.	Reservoirs below "Min" mark. Brakes won't stop vehicle.
						WARNING Wear leather gloves when working with wire rope.	
14.	•	•				WIRE ROPE: Check wire rope, rope sockets, and fittings for damage, wear corrosion, heat damage, fatigue and lubrication. Refer to the commercial operators manual for wire rope inspection criteria/standards, and descriptions of wire rope damage.	a. Six (6) randomly distributed broken wires in one (1) rope lay, or three (3) broken wires in one (1) rope lay. b. Loss of 1/3 the original diameter of outside wires is detected. c. The rope is deteriorated from rust or corrosion. d. There is severe kinking, crushing, or "birdcaging". e. Evidence of heat damage exists. f. Six (6) broken wires in one (1) strand.
						WARNING Sheave edges may be sharp. DO NOT touch the sheave edge. Visually check sheaves.	
15.	•					SHEAVES AND HOOK BLOCK: a. Visually check sheaves for sharp edges and wear. Sharp edges are evident when wire rope shows signs of cuts/frays or wear on the inside of the sheave groove. b. Check hook block for cracks/damage. Check safety latch for damage or missing hardware.	Sheave show evidence of sharp edges.
16.	•	•				ACCESSORY ITEMS: Check heater/defroster fan, windshield wipers, horns, and mirrors for damage, cracks, and proper operation.	
17.	•					BODY, CAB, HOOD, AND HULL ASSY: a. Check hood, fenders, deck, glass, and tool box for damage. b. Check operator's seat for tears.	

OPERATOR/CREW PREVENTIVE MAINTENANCE CHECKS AND SERVICES

B . BEFORE D - DURING A - AFTER W - WEEKLY M - MONTHLY

ITEM NO	INTERVAL B	D	A	W	M	ITEM TO BE INSPECTED PROCEDURE: CHECK FOR AND HAVE REPAIRED, FILLED, OR ADJUSTED AS NEEDED	EQUIPMENT IS NOT READY/AVAILABLE IF:
18.	•					WINCH:	
						Check for damage to winch or improperly wound cable. Check oil level (APPENDIX C). Fill as required.	Class III leak
19.	•	•				STEERING SYSTEM:	
						a. Check hoses, lines, and fittings for cracks, leaks, and loose fittings.	Class III leak.
						b. Check steering valve for damage.	Cracks or inoperable.
						c. Check steering valve selector for proper operation.	
20.		•				HYDRAULIC/MANUAL CONTROLS:	
						Operate controls. Check boom, outriggers, hook, block and swing (rotation) controls for smooth (proper) operation and leaks from the control valve.	Controls not operating properly. Class III leak.
21.		•				HYDRAULIC LINES, FITTINGS, AND CYLINDERS:	
						Check for leaks. Check cylinders for smooth operation.	Class III leak.
22.		•				ANTI-TWO BLOCK SYSTEM:	
						Check the system for proper operation. Lift the counterweight to touch the boom tip, an audible horn must sound, and warning light operate. Check the cable and reel for tension, and ease of operation and damage.	Hook block contacts boom. Controls fail to disconnect. Warning light/horn fails.
23.		•				BOOM ANGLE INDICATOR:	
						Check for proper operation. Raise and lower the boom, the indicator must move from "0" degrees to 75 degrees without binding/sticking.	Boom angle indicator is inoperative, missing or binding/sticking.
24.		•				BOOM:	
						Check for bent boom, excessively worn wear pads, cracked welds and heat damage.	Bent boom, cracked weld or heat damage.
25.		•				INSTRUMENTS:	
						Check instruments for the below listed readings:	
						a. TACHOMETER - RPM needle moves when thee accelerator pedal is depressed.	Tachometer needle doesn't move.
						b. REAR AXLE CENTERING LIGHT - Light on, wheels off center. Light off, wheels centered.	
						c. ENGINE TEMPERATURE GAUGE - Approximately 190° degrees F, (88° C).	Gauge inoperative.
						d. ENGINE OIL PRESSURE GAUGE - Idle 10 PSI, full load 30 PSI, cold oil may be 55 PSI.	Gauge inoperative.
						e. FUEL GAUGE - Needle indicates fuel level with the ignition on.	
						f. TRANSMISSION TEMPERATURE GAUGE - Range is 160° degrees to 190° degrees F (71° to 88° C). Cool down required above 250° F (121° C).	Gauge inoperative.

OPERATOR/CREW PREVENTIVE MAINTENANCE CHECKS AND SERVICES

B - BEFORE D - DURING A - AFTER W - WEEKLY M - MONTHLY

ITEM NO	INTERVAL					ITEM TO BE INSPECTED PROCEDURE: CHECK FOR AND HAVE REPAIRED, FILLED, OR ADJUSTED AS NEEDED	EQUIPMENT IS NOT READY/AVAILABLE IF:
	B	D	A	W	M		
						g. VOLTMETER - Indicates 27.5V charge.	
26.			•			MISCELLANEOUS:	
						Check for damage to the equipment and fluid leaks.	Class III leak. Damage causing the equipment to be inoperable.
						WARNING	
						Do not use high pressure steam on electrical components.	
27.			•			VEHICLE:	
						Clean/wash vehicle as required.	
28.		•				EXHAUST SYSTEM:	
						Check muffler, pipes, clamps & gaskets.	
29.						FUEL/WATER SEPERATER:	
						Drain fuel/water seperator daily and check for contamination. (Drain Approx. 1 pt.)	

INDEX

A

Accelerator Pedal 4-8
Air Cleaner, Checks and Inspections 4-11
Air Transport-Type I 4-72
Air Transport-Type II 5-48
Anti-Two Block Panel 4-7
Anti-Two Block System, Checks and Inspections 4-11
Attachments for Wire Rope, End Fittings and/or 4-35
Axle, Theory of Operation 3-2
Axles 1-7, A-1

B

Boom 1-9
Boom Angle Indicator 1-24
Boom Angle Indicator 4-8
Boom Cable Retention Pins, Checks and Inspections 4-11
Boom Cylinder 1-9
Boom Hoist Lever 4-6
Boom Length Markers 1-24, 4-9
Boom Telescope Lever 4-6
Brake Fluid, Checks and Inspections 4-11
Brake Pedal 4-8
Brakes 1-7
Break-In Requirements for New Cranes A-1
Breaking in New Wire Rope 4-43
Bubble Level 4-6

c

Cable:
Inspection 4-11, 4-43
Installing on Winch 2-4
Items Furnished 1-24
Lubrication B-1
Specifications 4-12
Spooling on Drums 2-3
Capabilities 1-5
Capacities 1-15
Cautions, General 1-36
Centerline of Rotation Chart, Radius from 1-22
Characteristics, Performance 1-5
Check List, Pre-Move 4-18
Checks and Inspections:
Air Cleaner 4-11
Anti-Two Block System 4-11
Boom Pin 4-11
Brake Fluid 4-11
Cable 4-11
Cable and Blocks 4-11
coolant 4-10
Engine Oil 4-10
Fuel 4-10
Fuel/Water Separator 4-10
Hydraulic System 4-10
Leakage 4-10
Lubrication 4-10
Safety Equipment 4-11
Tires 4-11
Transmission Oil 4-10
Checks and Services, Preventive Maintenance 4-13
Circuit Breakers 4-6
Clips, Wire Rope: 4-37
Fist Grip 4-39
U-Bolt 4-38

Cold Start 4-4, 4-66
Cold, Extreme 4-64
Completion of Upperstructure Assembly 5-38
Construction of Wire Rope, Identification and 4-28
Control and Instrument Identification 4-3
Control Settings, Initial Adjustments and 4-10
Converter, Torque 1-7
Coolant, Checks and Inspections 4-10
Counterweight 1-10
Cranes, New, Break-In Requirements A-1
Cutting Wire Rope 4-35
Cylinder, Boom 1-9

D

Dash Lights 4-4
Dash Light Switch 4-5
Decals, Safety 1-41
Decible Level Chart 1-10
Definition of Load Rating
References 1-16
Freely Suspended Load 1-18
Operating Radius 1-18
Side Load 1-18
Working Arc 1-18
Defroster Fan 4-8
Diagnostic Connector Panel 4-7
Diagnostic Guide to Common Wire Rope Abuses 4-50
Dimensions, Equipment Specifications 1-11
Dimensions, General 1-12
Drawbar 1-8
Drive Shafts A-1
Drums-Plain (Smooth) for Wire Rope 4-42

E

Electrical System 1-6
Emergency Load Lowering
Procedure: 4-56
Attach Supply Hose 4-57
Lower the Boom 4-60
Lower the Crane off the Outriggers 4-61
Lower the Load with the Winch 4-58
Prepare the Equipment 4-57
Retract the Boom 4-58
Secure the Hook Block 4-64
Swing the Crane Mechanically 4-56
Emergency Window Removal 4-69
End Fittings and/or Attachments for Wire Rope 4-35
Engine Oil Pressure Gauge 4-4
Engine Oil, Checks and Inspections 4-10, A-1
Engine Temperature Gauge 4-4
Engine:
Operating 4-18
Starting 4-17
Stopping 4-20
Environmental Requirements 1-24
Equipment Inspection, Wire Rope 4-55
Dimensions 1-11
Load Rating on Outriggers 1-19
Load Rating on Tires 1-20
Maximum Permissible Hoist Line Load Chart 1-21
Radius from Centerline of Rotation Chart 1-22
Weights 1-11
Working Area Diagram 1-23
Extreme Heat 4-69
Extreme Cold 4-64

F

Fire Extinguisher 4-8
Flexibility of Wire Rope 4-42
Forward-Neutral-Reverse Lever 4-6
Fuel Gauge 4-4
Fuel, Checks and Inspections 4-10
Fuel/Water Separator, Checks and Inspections 4-10

G

Gear Ranges 1-6
General Theory of Operation: 3-2
General:
Cautions 1-36
Dimensions 1-12
Warnings 1-27
Guidelines to Inspections and Reports of Equipment, Wire Rope and Wire Rope Slings 4-44

H

Hand Signals for Crane Operation 4-27
Heat, Extreme 4-69
Heater:
Shut-Off 4-8
Switch 4-8
Helicopter Transport-Type II 5-50
High Humidity or Saltwater 4-71
Hoist Line Load Chart, Maximum Permissible 1-21
Hoist Line Reeving 2-2
Hook Block 1-24
Hook, Pintle 1-8
Horn 4-4
Hydraulic System)-8
Hydraulic System, Checks and Inspections 4-10

I

Identification and Construction of Wire Rope 4-28
Ignition Switch 4-5
Initial Adjustments and Control Settings 4-10
Inspection Summary of Wire Rope 4-54
Inspection, Cable 4-11, 4-45
Inspections, Checks and 4-10
Installing:
Cable on Winch 2-4
Upperstructure on Carrier 5-35
Wedge Socket on Cable 2-3
Instrument Identification, Control and 4-3
Items Furnished, List of 1-24
Items Required, List of 1-24

J

Job Site, Moving to a 4-18

L

Land Transport-Type I 4-72
Land Transport-Type II 5-46
Leakage, Checks and Inspections 4-10
Lift Procedure:
on Outriggers 4-20
on Tires 4-25
Lift, Preparing Upperstructure for 5-32
Lifting Upperstructure onto Carrier 5-33

List of Items Furnished:
Boom Angle 1-24
Boom Length Markers 1-24
Cable 1-24
Hook Block 1-24
List of Items Required 1-24
Load Chart:
on Outriggers 1-19
on Tires 1-20
Load Lowering Procedure, Emergency 4-56
Load Rating References, Definition of 1-16
Load Rating:
on Outriggers 1-19
on Tires 1-20
Lowering the LRT 110 Crane to the Ground 5-44
Lubrication Chart B-4
Lubrication Instructions B-1
Lubrication Points, Illustrated B-4
Lubrication, Cable B-2
Lubrication, Checks and Inspections 4-10

M

Major Components:
Location 1-3
Nomenclature 1-4
Marine Transport-Type I 4-76
Marine Transport-Type II 5-50
Maximum Permissible Hoist Line Load Chart 1-21
Minimum Safety Requirements for Work Platforms Suspended from Load Line or Rigidly Mounted on Boom 1-42
Moving the LRT 110 Crane, Before 4-18
Moving to a Job Site 4-18

N

New Cranes, Break-In Requirements A-1
Nomenclature, Major Component 1-4

O

Operating Instructions and Functions: 4-1
Initial Adjustments and Control Settings 4-10
Operation Under Emergency and Abnormal Conditions 4-56
Operation Under Normal Conditions 4-18
Shut Down 4-71
start-up 4-17
Transportability 4-72
Use of Operator's Controls and Indicators 4-3
Operations Inspection, Wire Rope and 4-43
Operation:
Under Emergency and Abnormal Conditions 4-54
Under Normal Conditions 4-18
Operator Observations 4-11
Operator Troubleshooting 4-15
Outriggers:
Control Lever 4-5
Lift Procedure 4-20
Load Chart 1-19
Load Rating 1-19
Performance Characteristics 1-5
Switch (Front) 4-5
Switch (Rear) 4-5
Oversize Limits of Wire Rope Diameters 4-30

P

Parking Brake Lever 4-8
Parts Used for Assembly, Removing and Stowing 5-35
Parts Used for Separation, Removing and Stowing 5-22
Performance, Characteristics:
Electrical System 1-6
Engine 1-5
Outriggers 1-9
Torque Converter 1-7
Transmission 1-6
Pintle Hook 1-8
Power and Utility Requirements 1-24
Pre-Move Check List 4-18
Precautions, Safety 1-27
Preparation for Use:
Hoist Line Reeving 2-2
Installing Cable on Winch 2-4
Installing Wedge Socket on Cable 2-3
Spooling Cable on Drums 2-3
Preparation:
for and Assembly of Carrier and Upperstructure 5-26
of Carrier for Transport 5-25
for Removing Upper-structure from Carrier 5-15
for Separating Upper-structure from Carrier 5-2
of Upperstructure for Lift 5-32
of New Crane for Operation A-1
Preventive Maintenance Checks and Services (PMCS) 4-13
Purpose and Function: 1-3
General 1-4
Major Component Nomenclature 1-4

R

Radius from Centerline of Rotation Chart 1-22
Rail Transport-Type I 4-75
Rail Transport-Type 11 5-49
Rail Transport Materials List-Type I 4-78
Rail Transport Materials List-Type II 5-52
Rear Axle Centering Indicator 4-4
Reeving, Hoist Line 2-2
Removal and Stowage:
of Parts Used for Assembly 5-35
of Parts Used for Separation 5-22
of Remaining Parts Used in Assembly 5-42
Removing Upperstructure from Carrier, Preparation for 5-15
Replacement of Wire Rope 4-48
Requirements, Environmental 1-24

S

Safety Decals 1-41
Safety Equipment, Checks and Inspections 4-11
Safety Precautions:
General Cautions 1-36
General Warnings 1-27
Introduction 1-27
Minimum Safety Requirements for Work Platforms Suspended from Load Line or Rigidly Mounted on Boom 1-42
Safety Decals 1-41
Saltwater, High Humidity or 4-71
Sandy or Dusty Work Sites 4-70

Seat Adjust Lever 4-8
Sectionalization:
Preparation for and Sectionalization of LRT 110 Crane, Type II, for External Air Transport (EAT) 5-2
Preparation for and Assembly of Sectionalized LRT 110 Crane, Type II, After External Air Transport (EAT) 5-26
Seizing Wire Rope 4-34
Separating Upperstructure from Carrier, Preparation

Shut Down 4-71
Socketing Wire Rope 4-36
Special Break-In Requirements for New Cranes A-1
Specifications, Equipment 1-11
Speedometer 4-8
Spooling Cable on Drums 2-3
start-up 4-17
Starter Button 4-5
Starting the Engine 4-17
Steering 1-7
Steering Selector 4-5
Stopping the Engine 4-20
Storage Data 1-24
Stowage:
of Parts Used for Assembly 5-35
of Parts Used for Separation 5-22
of Remaining Parts Used in Assembly 5-42
Suspension 1-7
Swing Gear Box A-1
Swing Lever 4-5
Swing System 1-8
Systems:
Electrical 1-6
Hydraulic 1-8
Swing 1-8

T

Tachometer/Hour Meter 4-4
Terminal Efficiencies (Approximate) for Wire Rope 4-36
Test Equipment, Tools and 1-25
Time Intervals-Unusual Conditions B-1
Tires:
Checks and Inspections 4-11
Lift Procedure 4-25
Load Chart 1-20
Load Rating 1-20
Tools and Test Equipment 1-25
Torque Converter 1-7
Towing Procedure for Emergency Recovery Only-Type I 4-72
Towing Procedure for Emergency Recovery Only-Type II 5-46
Transmission 1-6
Transmission Oil, Checks and Inspections 4-10
A-1
Transmission Speed Shift Lever 4-6
Transmission Temperature Gauge 4-4
Transmission Theory of Operation 3-2
Transport, Preparation of Carrier for 5-25
Transportability-Type I: Air Transport 4-74

Land Transport 4-72
Marine Transport 4-76
Rail Transport 4-75

Towing 4-72
Transportability-Type II:
Air Transport 5-48
Helicopter Transport 5-50
Land Transport 5-46
Marine Transport 5-50
Rail Transport 5-49

Towing 5-46
Troubleshooting, Operator:
Electrical Circuit Non-Functional 4-15
Engine Cranks but Does Not Start 4-15
Engine Does Not Crank 4-15
Engine Oil Pressure-High or Low 4-16
Engine Overheating 4-16
Transmission Overheating 4-16
Turn Signals 4-7
Two Wheel/Four Wheel Drive Lever 4-6

u

Unreeling and Uncoiling Wire Rope 4-31
Unusual Conditions, Time Intervals B-1
Upperstructure:
Completion of Assembly 5-38
Installing on Carrier 5-35
Lifting onto Carrier 5-33
Preparing for Lift 5-32
Use of Operator's Controls and Indicators 4-3
Utility Requirements, Power and 1-24

v

Vehicle Lights Switch 4-5
Vehicle Shutdown Procedures 4-71
Voltmeter 4-4

w

Warnings, General 1-27
Warranty Information 1-27
Wedge Socket on Cable, Installing 2-3
Wedge Sockets for Wire Rope 4-40
Weights, Equipment Specifications 1-11
Wheels 1-7
Winch 1-9
A-1
Winch Lever 4-6
Winch, Theory of Operation 3-3
Window Removal, Emergency 4-69
Windshield Wiper Switch 4-5
Wire Rope Classifications 4-28
Wire Rope Clips: 4-37
Fist Grip 4-39
U-Bolt 4-38
Wire Rope Damage, Illustrated Examples 4-51
Wire Rope Identification and Construction 4-28
Wire Rope Inspection for:
Abrasion 4-45
Bird Caging 4-47
Broken Wires 4-48
Corrosion 4-47
Damaged End Attachments 4-47
Fatigue Failure 4-48
Heat Damage 4-47
Kinks 4-47
Localized Conditions 4-47

Peening 4-48
Protruding Core 4-47
Reduction in Rope Diameter 4-46
Scrubbing 4-48
Stretched Rope 4-45
Wire Rope Installation 4-30
Wire Rope Instructions 4-28
Breaking in a New Wire Rope 4-43
Cable Lubrication B-1
Classifications 4-29
Clips 4-37
Cutting Wire Rope 4-35
Diagnostic Guide to Common Wire Rope Abuses 4-50
Drums-Plain (Smooth) 4-42
End Fittings and/or Attachments 4-35
Equipment Inspection 4-55
Flexibility of Wire Rope 4-42
Guidelines to Inspections and Reports for Equipment, Wire Rope and Wire Rope Slings 4-44
Identification and Construction 4-28
Illustrated Examples of Possible Wire Rope Damage 4-51
Inspection 4-45
Inspection Summary 4-54
Installation 4-30
Operations Inspection 4-43
Oversized Limits of Wire Rope Diameters 4-30
Seizing Wire Rope 4-34
Socketing 4-36
Terminal Efficiencies (Approximate) 4-36
Unreeling and Uncoiling 4-29
Wedge Sockets 4-40
When to Replace Wire Rope 4-43
Wire Rope Slings 4-44
Work Lights Switch 4-5
Work Platforms Suspended from Load Line or Rigidly Mounted on Boom, Minimum Safety Requirements for 1-42
Work Sites, Sandy or Dusty 4-70
Working Area Diagram 1-23
Working Positions 1-23

By Order of the Secretary of the Army:

GORDON R. SULLIVAN
General, United States Army
Chief of Staff

official:

PATRICIA P. HICKERSON
Brigadier General, United States Army
The Adjutant General

Distribution:

To be distributed IAW DA Form 12-25-E (Block No. 5737) Operator's maintenance requirements for TM 5-3810-305-10.

U.S. GOVERNMENT PRINTING OFFICE : 1994-300-421 (03207)

RECOMMENDED CHANGES TO EQUIPMENT TECHNICAL PUBLICATIONS

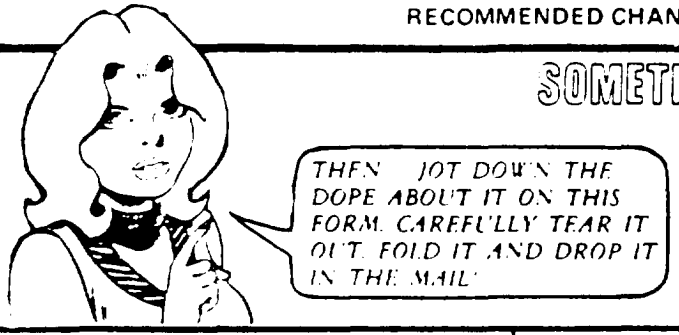

SOMETHING WRONG WITH THIS PUBLICATION?

FROM (PRINT YOUR UNIT'S COMPLETE ADDRESS)
Cdr, 1st Inf Bn
ATTN: SP4 J. Brown
Key West, FL 33040

DATE SENT
Date you send 2028-2

PUBLICATION NUMBER	PUBLICATION DATE	PUBLICATION TITLE
TM 10-3930-657-14&P	Date of TM	Operator's, Organizational, Direct Support General Support Maintenance Manual

BE EXACT. PIN-POINT WHERE IT IS

PAGE NO	PARA GRAPH	FIGURE NO	TABLE NO
1	2	6	

IN THIS SPACE TELL WHAT IS WRONG AND WHAT SHOULD BE DONE ABOUT IT:

Page 1, para 2, figure 6; the paragraph does not relate to the nomenclature. Please correct this mistake.

SAMPLE

PRINTED NAME, GRADE OR TITLE, AND TELEPHONE NUMBER
SP4 J. Brown, AUTOVON 721-8331

SIGN HERE
Jerome Brown

DA FORM 1 JUL 79 2028-2

PREVIOUS EDITIONS ARE OBSOLETE.

P.S.—IF YOUR OUTFIT WANTS TO KNOW ABOUT YOUR RECOMMENDATION MAKE A CARBON COPY OF THIS AND GIVE IT TO YOUR HEADQUARTERS

RECOMMENDED CHANGES TO EQUIPMENT TECHNICAL PUBLICATIONS

SOMETHING WRONG WITH THIS PUBLICATION?

FROM: (PRINT YOUR UNIT'S COMPLETE ADDRESS)

DATE SENT

PUBLICATION NUMBER	PUBLICATION DATE	PUBLICATION TITLE
TM5-3810-305-10	9 August 1991	Operator's Manual for Crane, Wheel Mounted, Hydraulic, Light, 7 1/2 TON (Rough Terrain Crane)

BE EXACT. PIN-POINT WHERE IT IS

PAGE NO	PARA-GRAPH	FIGURE NO	TABLE NO

IN THIS SPACE TELL WHAT IS WRONG AND WHAT SHOULD BE DONE ABOUT IT:

PRINTED NAME, GRADE OR TITLE AND TELEPHONE NUMBER

SIGN HERE

DA FORM 1 JUL 79 2028-2

PREVIOUS EDITIONS ARE OBSOLETE.

P.S.--IF YOUR OUTFIT WANTS TO KNOW ABOUT YOUR RECOMMENDATION MAKE A CARBON COPY OF THIS AND GIVE IT TO YOUR HEADQUARTERS

REVERSE OF DA FORM 2028-2

FILL IN YOUR UNIT'S ADDRESS

FOLD BACK

DEPARTMENT OF THE ARMY

OFFICIAL BUSINESS

TEAR ALONG PERFORATED LINE

Commander
US Army Tank-Automotive Command
ATTN: AMSTA-MB
Warren, Michigan 48397-5000